Volume 115, Issue 1874
February 2009 £4.60

ELECTRONICS WORLD

www.electronicsworld.co.uk

THE ESSENTIAL ELECTRONICS ENGINEERING MAGAZINE

- **SPECIAL REPORT:** DATA ACQUISITION AND DATA LOGGING
- TWO **NEW READER OFFERS** (SEE INSIDE FOR DETAILS)
- **NEW** QUARTERLY ANALYST COLUMN

WAVEMASTER 8 ZI

4GHZ – 30GHZ
FAST THROUGHPUT
REAL-TIME OSCILLOSCOPE

NANO KTN
NEW COLUMN FOCUSING ON NANOTECHNOLOGY

DATA ACQUISITION
UNDERSTANDING AND DESIGNING WITH DAQ

PRODUCTS
COMPONENTS, SYSTEMS AND SOFTWARE

ALSO IN THIS ISSUE: THE TROUBLE WITH RF • TIPS ‘N’ TRICKS • CIRCUIT IDEAS

QUASAR electronics
The Electronic Kit Specialists Since 1993

Quasar Electronics Limited
PO Box 6935, Bishops Stortford
CM23 4WP, United Kingdom
Tel: 0870 246 1826
Fax: 0870 460 1045
E-mail: sales@quasarelectronics.com
Web: www.QuasarElectronics.com

Postage & Packing Options (Up to 0.5Kg gross weight): **UK Standard 3-7 Day Delivery** - £3.95; **UK Mainland Next Day Delivery** - £8.95; **Europe (EU)** - £6.95; **Rest of World** - £9.95 (up to 0.5Kg)
!Order online for reduced price UK Postage!
We accept all major credit/debit cards. Make cheques/PO's payable to Quasar Electronics. Prices include 17.5% VAT.
Please visit our online shop now for details of over 500 kits, projects, modules and publications. Discounts for bulk quantities.

08717 Credit Card Sales 177 168

Motor Drivers/Controllers

Here are just a few of our controller and driver modules for AC, DC, Unipolar/Bipolar stepper motors and servo motors. See website for full range and Pdetails.

Computer Controlled / Standalone Unipolar Stepper Motor Driver

Drives any 5-35Vdc 5, 6 or 8-lead unipolar stepper motor rated up to 6 Amps. Provides speed and direction control. Operates in stand-alone or PC-controlled mode for CNC use. Connect up to six 3179 driver boards to a single parallel port. Board supply: 9Vdc. PCB: 80x50mm.
Kit Order Code: 3179KT - **£12.95**
Assembled Order Code: AS3179 - **£19.95**

Computer Controlled Bi-Polar Stepper Motor Driver

Drive any 5-50Vdc, 5 Amp bi-polar stepper motor using externally supplied 5V levels for STEP and DIRECTION control. Opto-isolated inputs make it ideal for CNC applications using a PC running suitable software. Board supply: 8-30Vdc. PCB: 75x85mm.
Kit Order Code: 3158KT - **£17.95**
Assembled Order Code: AS3158 - **£27.95**

Bi-Directional DC Motor Controller (v2)

Controls the speed of most common DC motors (rated up to 32Vdc, 10A) in both the forward and reverse direction. The range of control is from fully OFF to fully ON in both directions. The direction and speed are controlled using a single potentiometer. Screw terminal block for connections.
Kit Order Code: 3166v2KT - **£17.95**
Assembled Order Code: AS3166v2 - **£27.95**

DC Motor Speed Controller (100V/7.5A)

Control the speed of almost any common DC motor rated up to 100V/7.5A. Pulse width modulation output for maximum motor torque at all speeds. Supply: 5-15Vdc. Box supplied. Dimensions (mm): 60Wx100Lx60H.
Kit Order Code: 3067KT - **£13.95**
Assembled Order Code: AS3067 - **£21.95**

Most items are available in kit form (KT suffix) or assembled and ready for use (AS prefix).

Controllers & Loggers

Here are just a few of the controller and data acquisition and control units we have. See website for full details. Suitable PSU for all units: Order Code PSU445 £8.95

8-Ch Serial Isolated I/O Relay Module

Computer controlled 8-channel relay board. 5A mains rated relay outputs. 4 isolated digital inputs. Useful in a variety of control and sensing applications. Controlled via serial port for programming (using our new Windows interface, terminal emulator or batch files). Includes plastic case 130x100x30mm. Power Supply: 12Vdc/500mA.
Kit Order Code: 3108KT - **£54.95**
Assembled Order Code: AS3108 - **£64.95**

Computer Temperature Data Logger

4-channel temperature logger for serial port. °C or °F. Continuously logs up to 4 separate sensors located 200m+ from board. Wide range of free software applications for storing/using data. PCB just 45x45mm. Powered by PC. Includes one DS1820 sensor.
Kit Order Code: 3145KT - **£17.95**
Assembled Order Code: AS3145 - **£24.95**
Additional DS1820 Sensors - **£3.95 each**

Rolling Code 4-Channel UHF Remote

State-of-the-Art. High security. 4 channels. Momentary or latching relay output. Range up to 40m. Up to 15 Tx's can be learnt by one Rx (kit includes one Tx but more available separately). 4 indicator LED 's. Rx: PCB 77x85mm, 12Vdc/6mA (standby). *Two and Ten channel versions also available.*
Kit Order Code: 3180KT - **£44.95**
Assembled Order Code: AS3180 - **£54.95**

DTMF Telephone Relay Switcher

Call your phone number using a DTMF phone from anywhere in the world and remotely turn on/off any of the 4 relays as desired. User settable Security Password, Anti-Tamper, Rings to Answer, Auto Hang-up and Lockout. Includes plastic case. Not BT approved. 130x110x30mm. Power: 12Vdc.
Kit Order Code: 3140KT - **£54.95**
Assembled Order Code: AS3140 - **£69.95**

Infrared RC Relay Board

Individually control 12 on-board relays with included infrared remote control unit. Toggle or momentary. 15m+ range. 112x122mm. Supply: 12Vdc/0.5A
Kit Order Code: 3142KT - **£47.95**
Assembled Order Code: AS3142 - **£59.95**

PIC & ATMEL Programmers

We have a wide range of low cost PIC and ATMEL Programmers. Complete range and documentation available from our web site.

Programmer Accessories:
40-pin Wide ZIF socket (ZIF40W) £14.95
18Vdc Power supply (PSU010) £18.95
Leads: Parallel (LDC136) £3.95 / Serial (LDC441) £3.95 / USB (LDC644) £2.95

NEW! USB & Serial Port PIC Programmer

USB/Serial connection. Header cable for ICSP. Free Windows XP software. Wide range of supported PICs - see website for complete listing. ZIF Socket/USB lead not included. Supply: 16-18Vdc.
Kit Order Code: 3149EKT - **£39.95**
Assembled Order Code: AS3149E - **£49.95**

NEW! USB 'All-Flash' PIC Programmer

USB PIC programmer for all 'Flash' devices. No external power supply making it truly portable. Supplied with box and Windows Software. ZIF Socket and USB lead not included.
Assembled Order Code: AS3128 - **£44.95**

"PICALL" PIC Programmer

"PICALL" will program virtually all 8 to 40 pin *serial-mode* AND *parallel-mode* (PIC16C5x family) programmed PIC micro controllers. Free fully functional software. Blank chip auto detect for super fast bulk programming. Parallel port connection. Supply: 16-18Vdc.
Assembled Order Code: AS3117 - **£24.95**

ATMEL 89xxxx Programmer

Uses serial port and any standard terminal comms program. Program/ Read/ Verify Code Data, Write Fuse/Lock Bits, Erase and Blank Check. 4 LED's display the status. ZIF sockets not included. Supply: 16-18Vdc.
Kit Order Code: 3123KT - **£24.95**
Assembled Order Code: AS3123 - **£34.95**

www.QuasarElectronics.com

No.1 FOR KITS

Secure Online Ordering Facilities • Full Product Listing, Descriptions & Photos • Kit Documentation & Software Downloads

CONTENTS

REGULARS

05 **EDITOR'S COMMENT**
2009 INDUSTRY HEALTH-CHECK

06 **TECHNOLOGY**

New 07 **QUARTERLY ANALYST COLUMN**
2009: YEAR OF INNOVATION AND CREATIVITY
by **Malcolm Penn**

New 08 **NANOTECHNOLOGY KTN COLUMN**
THE FUTURE OF ELECTRONICS IS IN THE NANO DOMAIN

10 **THE TROUBLE WITH RF...**
WHAT CAN YOU ACTUALLY DO WITH A RADIO MODULE?
by **Myk Dormer**

41 **CIRCUIT IDEAS**

42 **TIPS 'N' TRICKS**

45 **PRODUCTS**

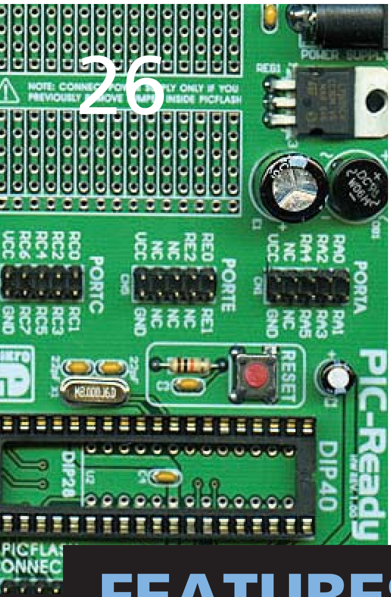

FEATURES

12 DATA ACQUISITION AND DISCRETE INSTRUMENTS PROVIDE THE RIGHT MIX FOR SIMPLER LITHOGRAPHY PROCESS MONITORING
Jonathan Tucker discusses the merits of a test system consisting of a conventional or DMM-based data acquisition system

18 UNDERSTANDING NEXT GENERATION DATA ACQUISITION
Graham Green goes into the technical explanation of how to use a USB and Wi-Fi type of data acquisition

22 SPECIAL DATA ACQUISITION BOARD – PART 1
The first in a series of articles by **Maurizio Di Paolo Emilio** focusing on a data acquisition board project for the management of environmental sensors

26 DESIGN OF A MULTICHANNEL TEMPERATURE DATA LOGGER WITH SD CARD STORAGE
Professor Dr Dogan Ibrahim describes the design of a microcontroller-based multichannel temperature data logger with SD card storage and real-time clock interface

34 PLC WITH PIC16F648A MICROCONTROLLER – PART 4
Dr Murat Uzam presents the fourth article in a series that focuses on a microcontroller-based PLC

Page 16-17 – The place to find more about **LeCroy's Wavemaster 8 ZI**

No Compromise Oscilloscope

pico Technology

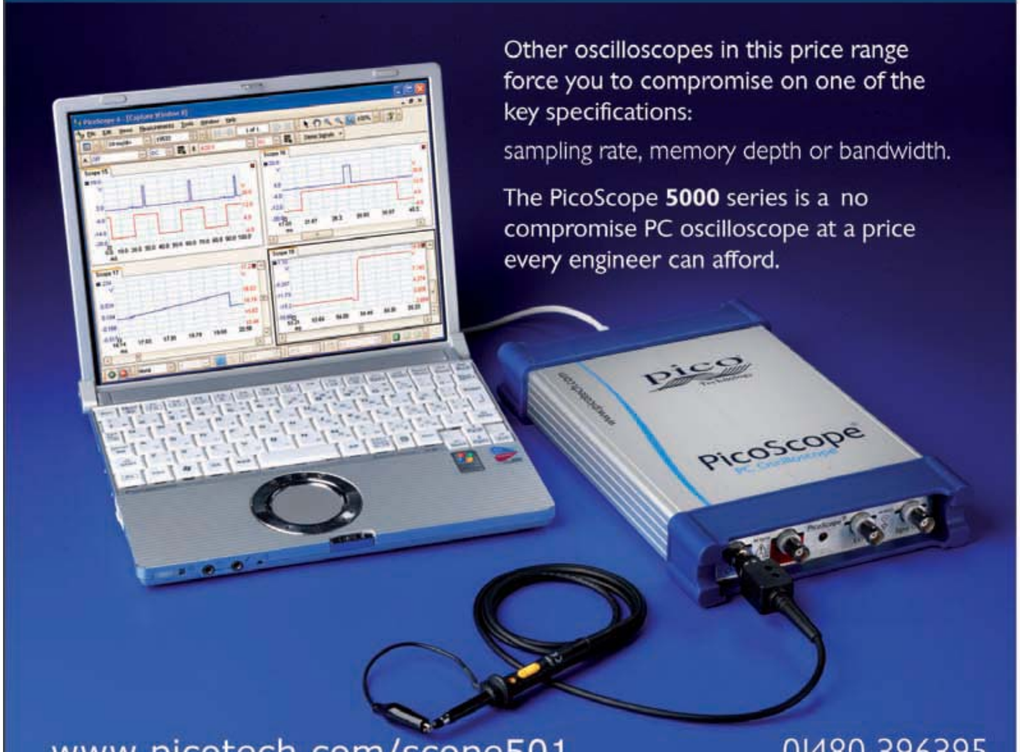

Other oscilloscopes in this price range force you to compromise on one of the key specifications:

sampling rate, memory depth or bandwidth.

The PicoScope **5000** series is a no compromise PC oscilloscope at a price every engineer can afford.

www.picotech.com/scope501

01480 396395

1GS/s sampling rate

250MHz bandwidth

128M sample buffer memory

125MS/s 12 bit AWG built in

PicoScope 5203
32M buffer **£1195**

PicoScope 5204
128M buffer **£1795**

IET
Collective **inspiration**

The Institution of **Engineering and Technology**

European Pulsed Power Conference 2009

Incorporating the CERN Klystron Modulator Workshop

21 – 25 September 2009 I CERN I Geneva I Switzerland

Call for Papers

This is your opportunity to take your place among leading names to discuss the broad range of recent advances in research and applications for pulsed power. Abstracts are invited on relevant topics including industrial applications (blasting, chemical, mechanical, plasmas and ordnance); scientific applications (including high energy physics, environmental, EM launchers, medical & biological, radiation sources, intense beams, high power microwaves, plasmas, accelerators & lasers), high speed diagnostics and high voltage components. All papers presented at the conference will be indexed by IET Inspec and IEEE Xplore.

For the full range of themes and to submit your paper, please visit the web site **www.theiet.org/pulsedpower.**

The conference will be supplemented with Klystron Modulator Workshops, technical visits to the CERN facilities and a conference dinner at the CERN Globe.

Key Dates:

17 April 2009	Deadline for receipt of abstracts
5 June 2009	Author notification
31 July 2009	Deadline for full papers
21-25 September 2009	Conference

www.**theiet**.org/pulsedpower

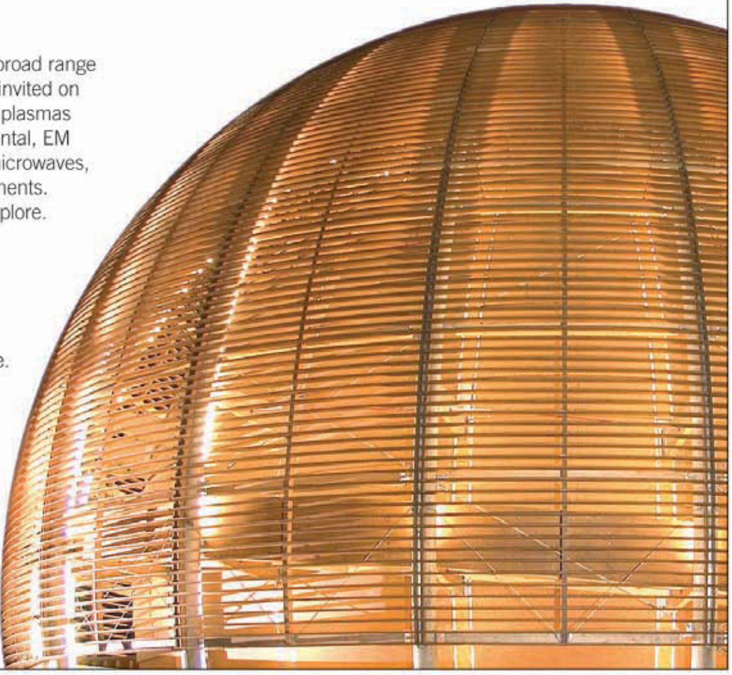

ELECTRONICS
WORLD

EDITOR:
Svetlana Josifovska
Email: svetlanaj@stjohnpatrick.com

PRODUCTION MANAGER:
Tania King
Email: taniak@stjohnpatrick.com

DISPLAY SALES EXECUTIVE:
Matthew Dawe
Tel: +44 (0) 20 7933 8999
Email: matthewd@stjohnpatrick.com

SALES DIRECTOR:
Chris Cooke

PUBLISHER:
John Owen

SUBSCRIPTIONS:
Saint John Patrick Publishers
c/o Circulation Data Services Ltd
The Coach House, Turners Drive
Thatcham, Berkshire
RG19 4QB
Tel: 01635 879361
Fax: 01635 868594
Email: electronicsworld@circdata.com

SUBSCRIPTION RATES:
1 year: £46 (UK); €120 (Europe);
$145 (US & worldwide)

MISSING ISSUES:
Email: electronicsworld@circdata.com

NEWSTRADE:
Distributed by Seymour Distribution Ltd,
2 East Poultry Avenue,
London, EC1A 9PT
+44 (0) 20 7429 4000

PRINTER:
William Gibbons Ltd

St John Patrick Publishers

2009 Industry Health-Check

Dear Readers,

With all the economic woes we've seen over the past several months, it feels like we should "close shop" and "call it a day". The ripples following the collapse of the mortgage system, followed by the collapse of the banking system, followed by withdrawal of loans which is causing consumers to stop spending, are sooner or later expected to show in our industry too.

In the car business, production has either stopped or will stop over the coming few months. Component suppliers as well as test and measurement companies have already noticed a difference to their orders as a direct result.

Luckily, not many in our industry are clutching their heads just yet. Talking to UK's AFDEC (Association of Franchised Distributors of Electronics Components), indeed there's a lack of visibility for orders in the first quarter of 2009, but, so far, nobody has gone bust. Adam Fletcher, AFDEC's chairman believes that there's definitely lack of confidence, but that's due to the financial sector. He goes on to say that if there're no further shakes in the banking system, we should start to see a positive impact as soon as the middle of 2009, with a full recovery in 2010.

Nevertheless, AFDEC refrained from completing its full yearly forecast for the health status of its member distributors for 2009 – the association said that "there's lack of visibility" at this point in time.

But, I like a positive take on things, and it's not coming just from one sector. Test and measurement companies are stating the same thing: at worst they expect flat figures in 2009, but that's as bad as they expect it to get.

Electronica, the big biannual trade show, only ended a couple of months ago and even there we did not see desperation, certainly not of the kind that was so obviously felt in 2000-2002 when the telecom and dotcom bubble burst. The negative peaks in sales and orders experienced then will not be forgotten and are certainly feared but, we as an industry are not experiencing anything like it for the time being.

It is true that industry analysts have been slashing next year's expectations left, right and centre, and there have definitely been declines in some sectors, such as in the semiconductor equipment making, for example. Some companies have already shed some jobs, have restructured and cut costs. So, we are nowhere out of the woods just yet, and things may easily become a lot worse. But, for the time being, there doesn't seem to be a general panic and, equally, we should certainly not give in to hype – nobody wants to see a self-fulfilling prophecy.

Editor
Svetlana Josifovska

Electronics World is published monthly by **Saint John Patrick Publishers Ltd**, 6 Laurence Pountney Hill, London, EC4R 0BL.

EUROPE NEEDS AN INDUSTRIAL INNOVATION POLICY TO STAY IN THE LEAD

If Europe is to remain a leader in advanced micro and nanoelectronics knowledge creation it will need to have an industrial innovation policy in place as well as form strong alliances for its implementation. This is the message to European governments and the industry that came out of the European Nanoelectronics Forum 2008, held in Paris, France, in December.

"The time to act is now," said Alain Dutheil, President of AENEAS. "In order to sustain our European core values, we must keep the command of semiconductor technology, which underpins the developments of the Information Society. The European semiconductor industry is leading the market in several fields such as wireless components and automotive electronics. We must keep this momentum and increase it in several other fields, keeping our vision alive even in these difficult times."

The innovation policy is expected to redefine technology and business strategies for the semiconductor industry and include four key parts: an enlarged effort on R&D and an increase in R&D funding; a renewal in semiconductor manufacturing; the creation of new market opportunities; and a focus on attracting a highly skilled workforce and encouraging more students to complete technological studies.

However, for the policy to succeed, it will need the support of the European Commission and National States.

"The common vision of the industry is to reinforce the global competitive position of the European electronic food-chain by leveraging its competitive advantages and its local industrial infrastructure," said Enrico Villa, Chairman of CATRENE. "Europe's semiconductor companies and all the associated players are working on this by reassessing their strategies, by forming new alliances for research and by developing new market opportunities linked to social needs with a high technology potential."

The semiconductor industry enables around 10% of the global GDP. The traditional technology leaders such as Europe, the US and Japan, are faced with the rise of emerging competitors that are successfully attracting international business with financially advantageous operating conditions. In addition, the European economic environment is proving to be less and less adapted to globalised worldwide markets.

It is said that the European semiconductor industry can only be competitive if it competes in the same local economic and policy environment as the other semiconductor regions in the world.

Ultrasound Waves Create Virtual Objects

A team of Japanese researchers has developed a system that uses focused ultrasound waves to create "virtual" objects. So far only gloves and mechanical devices have been used in the field of haptics, where technology interfaces with users through the sense of touch.

Takayuki Iwamoto and his team from the University of Tokyo have now demonstrated a simple haptic device that employs a number of ultrasonic transducers. The transducers' ultrasound waves, which are a type of pressure wave, begin to interfere and as such can create a focal point that is perceived as a solid object.

The prototype also includes a camera that tracks the position of a user's hand and shifts the output from the transducers to move the focus around with the hand. The result is a feeling of tracing the edge or surface of the virtual object. The greater the force produced, the stiffer the virtual object appears.

So far, the system provides a small force in the direction of the 'y' axis, but with an improved geometry of the array of transducers and an increased amount of power, it will enable future devices to provide a variety of contours.

The inventors have already been contacted by key game console makers about the system.

■ The days of the computer mouse seem to be numbered, as industry analyst house Gartner predicts its demise after nearly 40 years of existence. The mouse will be superseded by gestural computer systems such as facial recognition devices and touch screens, especially with laptops and home entertainment PCs.

Steve Prentice, the Gartner analyst told BBC News, that his prediction is driven by the efforts of consumer electronics firms which are making products with new interactive interfaces inspired by the gaming market.

"You've got Panasonic showing forward facing video in the home entertainment environment, where you hold up your hand [gestures] and it also recognizes your face…. You even have emotive systems where you can wear a headset and control a computer by simply thinking."

■ NanoKTN and Materials KTN have announced a research brokering initiative, where an 'introduction service' will be available to link up technology developers with integrators and end users. This is expected to help the development of new and improved processes during tough market conditions.

Dr Martin Kemp of NanoKTN said: "Nanotechnology encompasses enabling technologies which can revolutionize materials and processes, but integrating these into end applications requires a networking and communication process which we aim to facilitate."

The first funding call to be targeted is the Technology Strategy Board 'High Value Manufacturing' Call which opens on 19th January 2009 with expressions of interest required by 26th February 2009.

■ The Engineering Council UK released the new version of its highly commended standard for professional engineering competence, UK-SPEC.

The standard builds on the 2003 document, integrating the three categories of registration – Engineering Technician, Incorporated Engineer and Chartered Engineer – into a format that emphasizes the progression possibilities for those entering the profession. It has also provided more detailed guidance on how to satisfy the requirements for registration and clarified educational benchmarks.

The new standard would not require additional study or experiences, but was intended to clarify and reinforce the original.

2009: YEAR OF INNOVATION AND CREATIVITY

Malcolm Penn is CEO and chairman of market analyst firm Future Horizons, based in the UK

WITH 2008 now behind us, it is time to look forward and make 2009 a productive and successful year. The downturn is likely to continue until around Q3 this year at the earliest, possibly into 2010, when the recovery will hopefully start to kick in. However amongst the continuing doom and gloom, the good news is that in recessions, innovation comes to the fore. Now more than ever is the time to grab the initiative and leave your competitors floundering.

> “SOLVE SOMEONE’S PROBLEM IN A DOWNTURN, THEY WILL LOVE YOU FOREVER; DO THE SAME IN A BOOM, CHANCES ARE YOU WILL BE ONE OF A CROWD AND FORGOTTEN TOMORROW”

Other than the economy, we know that the semiconductor fundamentals entering 2009 were not as bad as 2001, the 2001 slowdown was triggered by a simultaneously collapse of the dot-com inflated demand euphoria, the 9-11 driven economic slowdown and a massive inventory burn just as a huge amount of excess capacity was coming on stream – the so-called ‘perfect storm’.

The economic downturn however is worse, adding to the uncertainty, driven initially by the 2007 subprime meltdown and then spilling into the real financial markets following the 2008 Lehman Bros collapse. This has led to a major global credit crunch with banks hoarding cash and rebuilding equity. Gorged on debt, companies and consumers all but stopped spending triggering the Q4-2008 double-digit chip market fall.

Faced with a disastrous Q4 and an uncertain 2009, the big players in almost every area are making cutbacks on their R&D, so now is the time for start-ups and smaller companies to take the lead and grab some all important market share. While the short term gains of the cost cutting and hording cash are obvious, in the long run they will come back to bite and destroy, not protect shareholder value. The smaller companies who are more versatile can start to take market share off the sorts of companies who were previously thought of as untouchable.

When the industry eventually emerges from the recession, consumers and major brands will start to look for the next level of technology and innovation, indeed it will be the new technologies and innovative products that will help drive the recovery. If the major players have been concentrating on their existing products rather than looking forward and investing in R&D, the next technology could come from a smaller company or even a start-up.

It is a well-established fact that innovation is the oxygen of creativity; likewise that creativity is the engine of future market growth … you never grow a business by relying on old products. It is the next wave of inventions that keep the industry growing, either by allowing you to do something that was previously impossible, adding new features to expand its appeal, making an existing solution more practical or reducing its cost to make it more affordable.

It is also well-known that smaller companies are much more innovative than big ones. They have – or at least the successful ones will have – the passion, drive and fleetness of foot impossible to nurture in the inevitable large organisation bureaucracy. Entrepreneurs drive creativity; pen-pushers stifle it; you do not (or rather should not) see many pen-pushers in start-ups or SMEs.

With the recession restricting the overall market, that small company or start-up will stand out even more than usual. Solve someone’s problem in a downturn, they will love you forever; do the same in a boom, chances are you will be one of a crowd and forgotten tomorrow.

When the cycle bottoms, the VCs and institutional investors will wake up from the recession slumber and get back to business of building new firms. Greed will bring them back to the equation, but by then the smart firms will already be on a roll.

Survival of the fittest and regeneration of the species will continue to drive the chip market evolution; recessions being one catalyst, innovation the other, except chip industry evolution cycles are measured in decades.

Malcolm Penn can be contacted at mail@futurehorizons.com. Future Horizon’s website can be found at www.futurehorizons.com

THE FUTURE OF ELECTRONICS IS IN THE NANO DOMAIN

The Nanotechnology Knowledge Transfer Network (NanoKTN), one of the UK's primary knowledge-based networks for Micro and Nano-technologies, was set up by the Technology Strategy Board to promote and facilitate knowledge exchange, support the growth of UK capabilities, raise awareness of nanotechnology and provide thought leadership and input to the UK policy and strategy.

The NanoKTN's activities are built around focus groups which identify the gaps in the supply chain, as well as identifying the UK's potential in innovation. This information is reported back to the Technology Strategy Board to input into their UK Nanotechnology Strategy and also provides leverage for channeling government funds into specific areas of need.

For further information on the NanoKTN and its activities visit www.nanoktn.com

AT THE END of 2008, the NanoKTN announced a strategic partnership with the Joint Equipment and Materials Initiative (JEMI UK), to deliver a Nano Micro Systems focus group which will evaluate the issues of the supply chain for the Nanotechnology sector looking to supply into the Nano-electronics, MEMS and other related emerging hi-tech sectors.

Nanotechnology is everything less than 100nm, where non-classical effects are seen and physical and electrical properties are modified due to the small spaces they are in.

Nanoelectronics researchers follow two themes: "more Moore" and "more than Moore". In the "more than Moore" theme, processes are being used to develop novel micro and nano devices (includes MEMS-type devices) that can be typically combined with CMOS circuitry. We are now starting to see the introduction of NEMS (nano-electromechanical systems) and devices that bring together sensors and analogue electronics on one piece of silicon.

The market to date has been dominated by large scale producers of conventional CMOS devices, which are used in computers, mobile telephony and other high-volume consumer driven devices. However, increasingly niche applications are opening up for new technology which combines several technologies such as MEMS and standard CMOS.

One example of this is point of use care in the medical sector where nano-electronics, MEMS and microfluidics come together to provide new innovative ways of delivering analysis and drugs to patients. Use of nanotechnology in these sectors can potentially move these sectors forward.

Integrating complex components requires new approaches and it is in this area that the NanoKTN see opportunities for the UK. The UK cannot afford to follow Moore's Law so more nano-electronics research institutes and nanotechnology centres are deciding to follow the "more than Moore" agenda.

One of the NanoKTN's most important initiatives is to bring together everyone in the supply chain and to get them to think about the efficient and effective implementation of "More Than Moore" type technologies in this industry sector.

Although the technology is important, the supply chain needs to be stimulated.

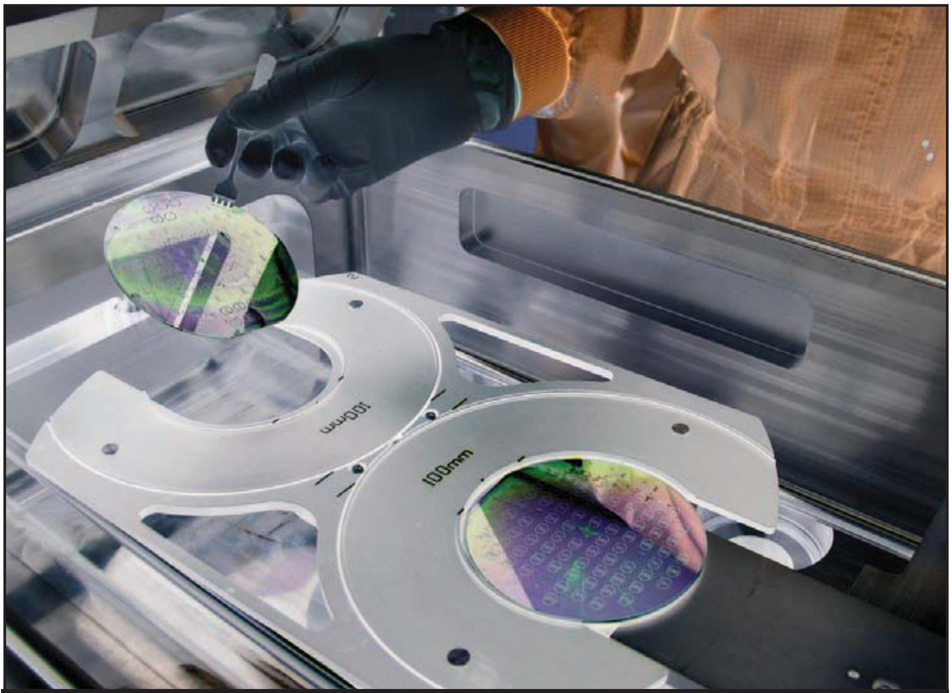

Figure 1: *Handling wafers in a clean room*

Nanotechnology

Knowledge Transfer Network

You need the materials, equipment and infrastructure to support the technology's successful utilisation. It is the aim of the Nano Micro Systems focus group to help stimulate the formation of the complete supply chain for successful implementation of nanotechnology in this industry sector.

The first event being organised by the Nano Micro Systems group will take place on Tuesday 31st March 2009 at the Rutherford Appleton Laboratory in Didcot, UK. The event will look at the area of Atomic Layer Deposition (ALD), thin film coating technology that makes it possible to control thickness at the sub-nanometre scale. The ALD event will see presentations from key players in this industry including Metryx, Oxford Instruments Plasma Technology and the Science and Technology Facilities Council (STFC) and will feature a table top exhibition offering unique opportunities to showcase products and services. There will also be a networking dinner the evening before the event open to all delegates and invited guests.

Key activities for the NanoKTN in the first quarter of 2009, as well as the Nano Micro Systems event, include two major conferences: "*Nano 4 Life: Converging Nanotechnology and the Life Science Industry*" and "*Nano4Energy*".

"*Nano 4 Life*", organised in collaboration with The Wellcome Trust, will explore the key areas within the life sciences where nanotech offers the most opportunity to advance healthcare provision, improve product discovery and development, and help keep the UK a leading force in this exciting technology area. The event will feature keynote speeches from industry leaders including GSK and renowned academics in the field, to explore ways in which nanotechnology will enable advances in life science commercialisation.

This conference will take place on 11th February 2009 at The Wellcome Trust in London.

The "*Nano4Energy*" conference will take place on 4th March at the East Midlands Conference Centre in Nottingham and is supported by the Carbon Trust. The conference will focus on the exploitation of nano-enabled clean energy generation, storage and conversion technologies and feature presentations from Carbon Trust, Low Carbon Vehicle Programme, Nanotecture, Plasmaquest, Oxford Surfaces, ACAL Energy and the Technology Strategy Board. ■

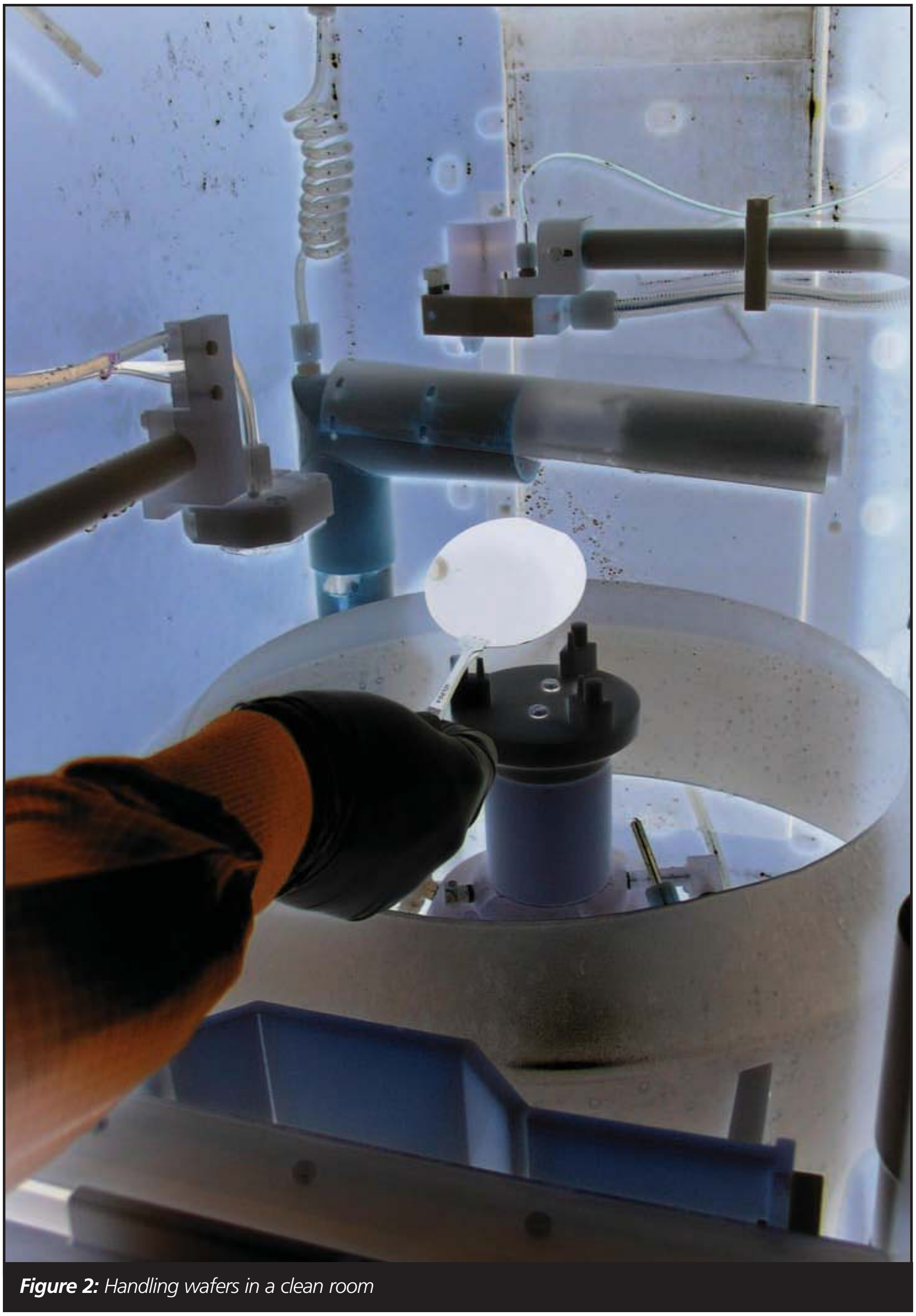

Figure 2: *Handling wafers in a clean room*

What can you actually do with a RADIO MODULE?

Myk Dormer

PREVIOUSLY I've written articles concentrating on the radio module hardware, and how it can best be used. This discussion is aimed more at answering the question "what is an ISM wireless module actually for?"

Take a look at any typical module datasheet. After the inevitable – and meaningless – claims of "high quality" and universal usefulness, and the necessary, but often all too sparse, technical data, there is usually a sad little list of generic "application examples", frequently the same list for every module a particular maker has in their whole catalogue, which could leave you believing that radio telemetry is only used for bar-code readers and dockyard crane control.

It can, of course be used here, but there is a whole other constellation of potential applications just waiting for a radio module that just requires a little thought.

Consider what the radio does. It is a device that transfers information from one point to another. That information can be a simple baseband waveform (carrying speech or tones) or a coded digital data-burst containing as little as a single bit ("controlled device on/off") right up to multi-megabyte image files.

The distance over which the radio link operates is similarly variable, depending on transmitter power, operating frequency band and receiver sensitivity. These figures can combine to give ranges that start in meters, and end in thousands of miles.

By concentrating on practical, available, wireless modules, we can close in on more practical figures. With the exception of WiFi LAN systems, most SRD radios offer peak data rates of between 5kbit/s (narrowband, long range, low power types) and 250kbit/s (wideband, short range designs) with practical (as opposed to "theoretical" or "claimed") ranges between 10m (low-end Bluetooth) and 1km (VHF).

That's still a fairly broad church, so let us consider a few more parameters. Few modules are smaller than two cubic centimetres, or bigger than twenty; 4 x 3 x 1cm is about average.

Current consumption will be, in most cases, between five and fifty milliamps (transmit current may be more for certain, high power units, but these are unusual) at five volts or less.

Prices range from, very roughly, ten pounds, up to over a hundred. Increased range is the main factor gained with increased cost. To a much lesser extent, improved functionality and easier interfaces are also gained.

So, what is our imaginary, 'average' wireless module? It may be either a one way (transmitter/receiver) or two way (transceiver) link. It has a (fairly) slow datastream, with a range roughly in proportion with a typical building, from a device that will fit in the palm of a hand, and can be run from a battery.

Now we can consider applications for this class of devices, by thinking of them:

1. From the point of view of the data channel.

Sending constant (or long) streams of information (such as human voice) is one of the most obvious uses for a communication link. In the literal sense, several allocated ISM bands (433MHz in the UK, parts of 869MHz and the 2.4GHz band) permit the transmission of voice, audio or video signals, while the ability to stream large blocks of data suggests data download or even low-speed LAN type tasks.

For example: Wireless audio devices (headphones, radio microphones), wireless hearing-aids, remote audio and video surveillance, contactless download from data logging devices (such as vehicle telematics or environmental monitors), industrial process monitoring, remote computer peripherals, remote reading of GPS datastreams (in asset tracking devices or differential GPS systems).

2. As a distant actuator:

Think of the device as a wireless replacement for a control cable, or a remote mounted switch, or remote monitor of an indicator or 'state'. Very little information (very few bits) is sent. This category contains most simple 'industrial switching' tasks, but also (when one thinks about it) the entire class of 'alarm' applications, where the remote identification of a discrete state-change (a smoke detector, a door-contact, a 'help' button) is required.

For example: Remote lighting control, irrigation pumps, fluid level monitors, wireless door entry controls (including the traditional 'garage door openers'), security ('burglar' or 'unauthorised entry') alarms, fire, gas or chemical leak alarms, personal 'nurse call' alarms, 'man down' alarms, simple remote vehicle control, heavy machinery (crane) control, remote key devices (the automotive 'key fob'), wireless 'machine stop' safety systems.

3. As a mobile data terminal:

Low power and compact dimensions are the key issues, usually combined with higher data volumes than 'cable replacement' applications.

Examples include: Portable instruments linked to remote data gathering networks (temperature or humidity monitors and, of course, bar code readers and EPOS terminals), data communication to vehicles (bus or lorry telemetry, marine data buoys, weather balloons), personal alarms (pager-type devices).

Or as something completely new.

There are thousands of short range wireless applications in the world's marketplaces but there are many, many more yet to be imagined. The hardware already exists. The challenge, and the opportunity, is to imagine something new to do with it.

Good luck!

Myk Dormer is Senior RF Design Engineer at Radiometrix Ltd
www.radiometrix.com

Jonathan Tucker, Lead Industry Consultant for Nanotechnology at Keithley Instruments, discusses the merits of a test system consisting of a conventional or DMM-based data acquisition system

Data Acquisition and Discrete Mix for Simpler Lithography

SEMICONDUCTOR original equipment manufacturers (OEMs) often develop electronic equipment and other subsystems internally. However, the "do it yourself" approach can result in proprietary hardware configurations that are costly from both a creation and a maintenance standpoint.

In an effort to reduce costs and improve reliability, OEMs are turning increasingly toward the use of commercial, off-the-shelf solutions. This approach makes even more sense where instrument manufacturers offer fully integrated product lines. Availability of a complete hardware solution from a single vendor can result in easier system integration and programming and more comprehensive support.

One of the most critical and complex steps in the creation of semiconductor devices is the lithography process, which is used to transfer complex geometric patterns on a mask to the surface of a wafer. Lithography is also among the most costly of fabrication processes, accounting for nearly one third of total fabrication costs.

Lithography processes commonly employed in the semiconductor industry are based on projection, laser and electron beam technology. Focused Ion Beam (FIB) systems have also been developed to perform nanometre-scale imaging, micro milling/machining, sputtering and mapping in the semiconductor industry. Typical FIB applications include mask repair, circuit modification, defect analysis and sample preparation on integrated circuits. The magnitude of the beam current determines what type of operation is performed. A low beam current results in very little material being sputtered and is therefore ideal for imaging applications. The use of higher beam currents result in a greater quantity of material being removed by sputtering; the technique is well suited for precise milling operations.

The fundamental principals between these processes are quite different, but each has common, critical, process parameters that must be monitored. The real-time measurement and control of voltage, current, temperature, atmospheric pressure, magnetic fields and other parameters, are essential during the design and test phases of product development. Sometimes, the most effective methodology results only after some trial and error. In one situation, proprietary control loops were designed to perform the necessary measurement functions, but these loops added a great deal of cost, complexity and additional points of failure to the system. Additionally, the loops were found to not contribute significantly to the quality of the process once the design was certified. Many of the real-time control loops were replaced with standard instrumentation for process monitoring.

In such applications, several factors need to be considered concerning the selection of instrumentation. Most often, the primary points of interest are accuracy, resolution, price per channel and ease of use. A variety of solutions are possible, ranging from computerised data acquisition systems to racks of discrete instruments. Each approach has its strengths and drawbacks.

Data acquisition equipment offers less in the way of high sensitivity, resolution and accuracy, but can deliver cost-effective monitoring for large numbers of channels. Discrete instruments typically provide higher performance for a limited number of channels, at a higher cost per channel. More recent data acquisition solutions based on DMM-like front ends can provide a solution for temperature, voltage and current measurement that optimises resolution, accuracy, ease of programming and cost per channel, as compared to traditional instruments and PC-based data acquisition systems.

Normally, the instrumentation interface selected for these test systems is the GPIB bus.

A variety of interfaces newer than GPIB have been introduced, including USB, Ethernet, Firewire (IEEE-1394) and different permutations of the classic serial interface. However, none provides GPIB's combination of universality, performance, robustness and multiple device connectivity.

Test Descriptions

Chamber Temperature

Temperature is an important parameter in most semiconductor manufacturing processes. The type of application will dictate the extent to which temperature monitoring and control are implemented. Dedicated temperature control loops may be necessary where elevated, stable chamber temperatures are required. If the process can be performed at or near room temperature, the cost and complexity of these control circuits can be reduced.

Systems of this type now rely on the environmental controls of the clean room to maintain a relatively constant operating temperature.

Instruments Provide the Right Process Monitoring

Typical clean rooms are designed with sophisticated temperature and humidity control systems that result in chamber temperatures being maintained within stringent, predefined, operating limits. Temperature measurements can thus be used to monitor the system for general thermal abnormalities, such as unusual spikes or drops. If such changes are detected, the process can be halted and a detailed inspection initiated to determine the cause.

Figure 1: *Data acquisition systems that borrow on DMM architecture provide a convenient platform for integrating temperature and other sensors into a measurement and control system*

A data acquisition system based on the DMM/switch concept (**Figure 1**) can monitor temperature very easily and directly using one or more precision 4-wire Resistance Temperature Detectors (RTDs). In contrast to thermocouples, RTDs exhibit very high accuracy and stability over a narrower temperature range (approximately -200°C to +800°C), but do not require any special linearisation or cold junction compensation (CJC) circuitry.

Furthermore, 4-wire RTDs are compatible with industry-standard 4-wire measurement techniques that eliminate the effects of measurement lead resistance. Additionally, offset compensation can eliminate a potential source of error that results from thermal offsets generated at the junction point of metal conductors. Instruments with dedicated RTD input channels and math processing can simplify sensor excitation, as well as the conversion of resistance to temperature in C, F, or K degrees (a process involving fairly complex polynomial equations).

Electron Beam Positioning

The position of an electron beam must be controlled precisely in order to write complex patterns on a wafer. The beam is aimed by passing it through a series of electrical fields that are generated by voltages applied to several sets of precisely positioned parallel plates, with the number of plates varying relative to the design and manufacturer. The beam is drawn by the electric field and the direction of the beam is manipulated by changing the field strength.

Typically, these voltages must be maintained with an accuracy of better than a few parts per million – roughly the equivalent of holding 100V to a tolerance of ±1mV. Additionally, the beam must be repositioned within microseconds, which requires that the power supply be able to achieve successive set points very rapidly.

Voltage control signals are generated using high speed, high precision DACs (Digital to Analogue Converters) and then routed through amplifiers to the parallel plates. Typically, DACs do not incorporate sense lines so there is no active feedback mechanism for controlling the plate voltages. In place of closed-loop control, the DMM/data acquisition system can perform voltage measurements of the amplified control signals, which it can verify with a basic accuracy of a 10-20ppm. These measurements are adequate for use as a diagnostic tool to help identify failed control lines, or those where failure may be imminent.

Field Current

Another component of the beam steering mechanism is implemented by means of magnetic field deflection. This is performed with a magnetic field generator that is driven by a number of precision current sources. Each of the current sources typically generates up to five amperes, so direct measurement of the current is impractical. Most instrumentation and switching platforms are not capable of measuring or switching high current and attempting to do so could degrade measurements as well as the process.

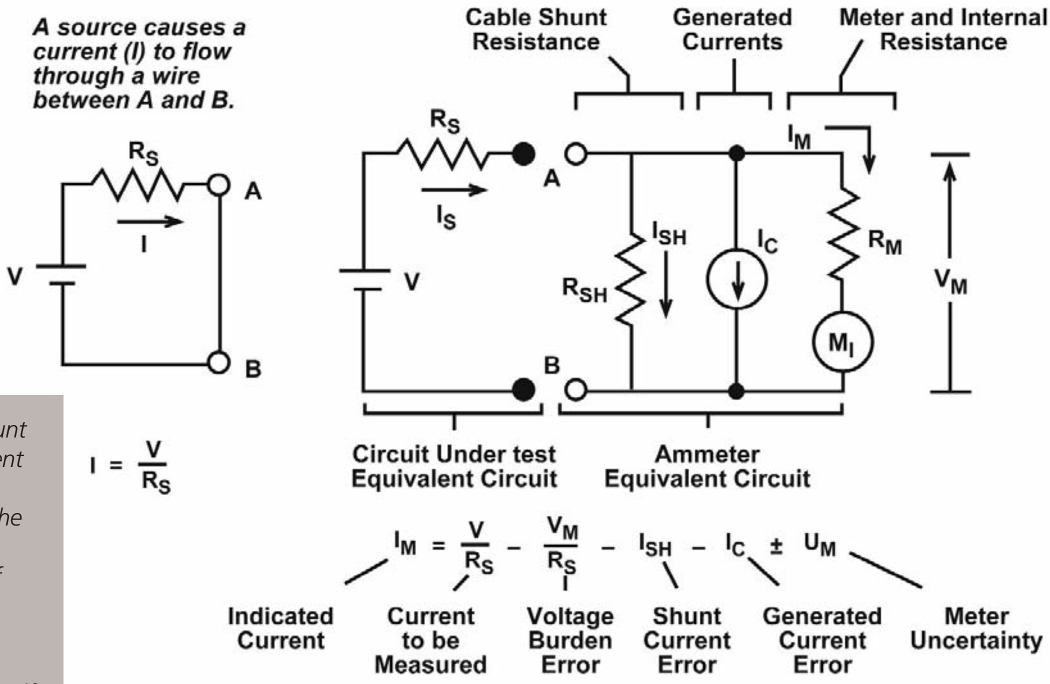

Figure 2: *Use of a shunt resistor (RSH) for current measurements can introduce errors into the measurement. Users must also be aware of other sources of error, such as currents (IC) generated in the measurement circuit itself*

A common solution to measuring high current is to measure the voltage drop across a precision low value resistor placed in series with the current source (I_{SH} in **Figure 2**). The voltage drop is proportional to the current flowing through the resistor. Furthermore, the current can be derived using Ohm's Law. For example, with a precision 1Ω resistor and a 4V measurement, the current can be calculated as:

$V = I \times R$
$I = V/R$
$I = 4V/1\Omega = 4A$

This technique provides a straightforward approach to measuring high currents. It is important to note that, because of the very nature of using a shunt resistor, this technique will induce some error into the measurement in the form of a voltage burden across the resistor. Therefore, care must be taken to select the lowest value resistor that still provides the required measurement resolution.

Channel Requirements

Systems of this type can require monitoring voltage levels for up to 100 channels, where voltages range from 1V to 90V. Generally, setting the measurement instrument to a manual range is preferable in order to avoid over-range conditions and subsequent autoranging. Typically, this will be the lowest range exceeding 90Vdc, i.e. a 100Vdc range.

As stated earlier, the current measurements are made by way of a shunt resistor. The expected voltage drop across the shunt is approximately 4V, so a 10V measurement range is adequate.

Focused Ion Beam Applications

Applications that call for the use of ion beams require monitoring and control of beam current to assure success of the process. Ion beam current cannot be measured directly; the process requires the use of an ion detector. There are several detectors commonly used throughout the industry including Channeltron, Daly, Microchannel plate and the Faraday cup.

The function of the detector is to develop a secondary current proportional to the current of the primary ion beam, without interfering with the primary beam. The basic operation of most detectors is that an ion from the primary beam strikes the detector and a secondary ion is generated, which is isolated from the primary ion stream. This current is measured and used to control the intensity of the beam. These secondary currents can be as low as 5pA to 6pA. Such low currents require an ammeter with sub picoamp sensitivity.

In addition to having sufficient sensitivity, the ammeter must also perform the measurement without interfering with the flow of current in the circuit. As with the measurement of higher currents, a chief concern becomes the voltage burden that the instrument introduces to the circuit.

The voltage burden is the terminal voltage developed across the input of the ammeter and ideally should be zero (no resistive effect). Some meters (e.g. DMMs) utilise a shunt resistor and derive the current level by measuring the voltage drop across this known resistance. A voltage burden of 200mV is not unusual for such instruments.

Significantly lower voltage burdens can be accomplished through the usage of picoammeters. Instead of the shunt technique, a picoammeter employs a feedback amplifier technique (**Figure 3**). This design reduces the voltage burden by several orders of magnitude, resulting in a voltage burden of less than 200µV. The low voltage burden enables the picoammeter to function more like an ideal ammeter than a DMM, so the ammeter can make current measurements with high accuracy, even in circuits characterised by very low source voltages.

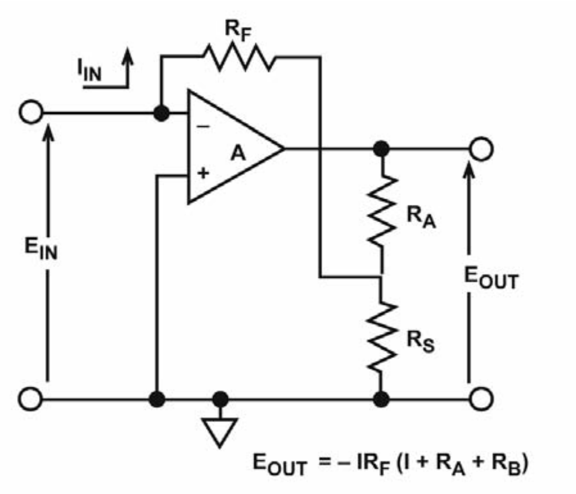

***Figure 3:** A feedback picoammeter relies on the fact that the inputs to the front-end differential amplifier are maintained at the same voltage by the action of the amplifier. Thus, EIN approaches 0V, minimising voltage burden*

Newer picoammeters are ideal for this application. In addition to having low voltage burdens, they can measure currents over a wider range, typically spanning from 10fA to 20mA. A picoammeter should therefore be added to the test system.

Sample Rate vs Performance

Sample rates for this application are relatively slow. Typically, the sampling and transfer of data to the host computer need only be completed every thirty seconds. These slow sampling rates generally mean that all available accuracy enhancements, such as signal processing, auto-zero features and line cycle integration, can be enabled to provide the highest quality measurements.

Where higher sampling rates must be maintained, the user may have to selectively disable or reduce the use of some of these features with the understanding that the resulting measurements may become more susceptible to error caused by drift or noise.

If the signal levels are relatively stable, manual ranging might be selected to save the time normally required by the instrument's autoranging operation. In all cases, the user should be aware of possible compromises in measurement quality that might result from different modifications to the instrument set-up.

Engineering Units Conversion and Limits Configuration

The use of an instrument containing built-in signal processing and math functions enables a user program to convert raw measured values to actual engineering units associated with a parameter being measured. For example, temperature measurements with an RTD begin as a simple voltage measurement, but units conversion yields temperature. Similarly, current measurements can be deduced from measurements of voltage drop across a shunt resistor.

The ability to program upper and lower pass/fail limits and associate these limits with a digital output signal can make it possible to automate alarm functions in response to abnormal signal levels. Once a fault condition has been identified, the state of an associated digital line can be switched to modify or terminate the process via an external relay or other control device.

Tailoring the Measurement System

Individual measurements in this application have a fairly common set of requirements. Temperature, voltage and current all must be performed with high precision, at an aggregate sample rate typically less than 10Hz. Additionally, the measurement hardware must be easily integrated into a larger system, where measurements can serve as stimuli or triggers to permit evaluation and tight control of processes.

A test system consisting of a conventional or DMM-based data acquisition system and a picoammeter can provide a unique, compact and cost-effective combination of measurement and switching capability that extends from the sub-picamp levels to tens or hundreds of volts. Generally, such a system will also be able to deal with standard temperature sensors such as RTDs and thermocouples.

Larger channel counts or other specialised measurement functions can usually be handled through the expansion of the data acquisition system with switching or signal conditioning cards, while the picoammeter provides accuracy and resolution needed for low-level precision measurements. ■

WAVEMASTER 8 ZI SERIES OSCILLOSCOPES

LeCroy Introduces 4 GHz – 30 GHz WaveMaster® 8 Zi Series – World's Highest Bandwidth, Fastest Real-Time Oscilloscopes

LeCroy new line of WaveMaster digital oscilloscopes, and Serial Data Analyzers – the 8 Zi Series – provides up to 30 GHz of bandwidth, 80 GS/s of sample rate, 512 Mpts of analysis, and greater than 15 GHz edge triggering. With exceptional instrument responsiveness, 10-100 times faster analysis processing time, a large 15.3", 16:9 high-definition touch screen display (50% larger than 12.1" displays), and both 50 Ω / 1 MΩ input capability, the WaveMaster 8 Zi Series is the most versatile oscilloscope platform available. Features previously announced with the Zi platform, such as TriggerScanTM rare event capture, removable front panel, integrated second display, and fast LSIB external data transfer (up to 250 Mpts/s – 25 to 50 times faster than any other method) are also available. The combination of performance, speed, precision, and capability provides engineers with deeper insight, faster debug, and more efficient validation.

LeCroy has designed the 8 Zi Series as a single hardware platform, supporting all eight models spanning from 4 to 30 GHz of bandwidth. This means engineers can leverage their investment and stay current with emerging high speed technologies and serial data standards by purchasing only the bandwidth needed for current designs, and upgrading to additional bandwidth as needs change. This is an especially attractive feature in lean economic times, particularly with upgrades available to 30 GHz of bandwidth, as companies seek to minimize capital investments.

The standard sample rate is 80 GS/s for 20 to 30 GHz bandwidths. For 4 – 16 GHz bandwidths, the standard sample rate is 40 GS/s on all four channels with an option to increase the sampling rate to 80 GS/s on two channels. 10 Mpts/ch is provided, with memory options up to 256 Mpts/ch available. All memory is available at full record lengths for analysis processing. In 80 GS/s mode, memory can be interleaved to 512 Mpts/ch.

Superior Serial Data Analysis

SDA 8 Zi Serial Data Analyzers are based on the WaveMaster 8 Zi Series oscilloscope. They are equipped with double the standard memory and they include an enhanced high-speed serial pattern trigger that operates on up to 80 bit patterns and at speeds up to 3.125 Gb/s.

The expansive SDA II toolset includes superior jitter breakdown methodologies and more precise jitter breakdown tools to increase confidence in measurements, and offer more complete insight, faster than competitive tools. Eye diagram analysis can be accomplished 100 times faster than competitive tools, nearly 1 million unit intervals of PCI Express can be captured, analyzed, and displayed in 3 seconds. Additional tools, such as IsoBER and Mask Violation Locator make it easy to understand complex problems. The Cable De-Embedding feature allows cable distortion effects to be removed to achieve more accurate timing and amplitude measurements on high-speed eye diagrams. Complete, simultaneous views of eye diagrams, time interval error, bathtub curves, jitter histograms, and other jitter breakdown analysis is standard in the new SDA 8 Zi analyzers.

LECROY EUROPE:
WWW.LECROY.COM/EUROPE

LECROY UNITED KINGDOM:
WWW.LECROY.CO.UK

At the compliance stage, automated QualiPHYTM packages are available for a variety of established standards, such as PCIe, SAS, SATA, HDMI, DisplayPort, and XAUI.

Fast Throughput with X-Stream II Streaming Architecture

Designed for long memory operation and responsiveness X-Stream II technology enables high throughput of data—even when the oscilloscope is analyzing eight 256 Mpts waveforms. This architecture uses variable waveform segment lengths to improve CPU cache memory efficiency resulting in 10 to 20 times faster processing compared to other oscilloscopes. This eliminates the trade-offs between long memory length and quick processing. WaveMaster 8 Zi's proprietary architecture design is augmented with an Intel®Core™2 Quad processor, high-speed serial data buses, a 64-bit OS and up to 8 GB of processor RAM.

Cascade Triggering Helps to Isolate Rare Events Quickly

SMART triggers are further enhanced with the ability to sequence SMART and Edge triggers in up to a three trigger cascade arrangement to reduce the amount of time required to debug circuit and bus problems. Very fast (200ps) glitch and width triggering capability, a selection of 12 different SMART triggers, exclusion triggering, and ability to link a WaveScanTM search condition with the cascaded triggering sequence makes for a very powerful rare event isolator.

Integrated Second Display Provides More Insight

The advanced Zi oscilloscope platform provides more input, processing and analytical capability than any other oscilloscope available. The standard 15.3" display provides 50% more area to view acquisitions and analysis, compared to a 12.4" display. With the addition of the integrated second display, the viewing area triples. The integrated second display is identical to the main display and is conveniently aligned and attached above the main display. The oscilloscope grid may be split by the user between the two displays. Waveform acquisitions, math traces, or memory (reference) traces could be moved and viewed in either location. The second display may also be used more conventionally to simultaneously run and view third party programs, such as MATLAB, or to view on-screen Help or the advanced LeCroy processing web.

Understanding Next Generation Data Acquisition

OVER THE PAST 20 years, data acquisition has evolved from a limited, inaccessible set of technologies into an integrated and intuitive platform for high performance measurements. With the software-centric approach of graphical programming and modular, PC-based hardware, engineers and scientists can rapidly develop powerful, flexible and highly customisable DAQ systems.

The ability to easily integrate USB and Wi-Fi measurements within an application opens new doors in developing DAQ systems. For example, Saphir, a National Instruments Alliance Partner based in France, recently developed a USB-based advanced sound and vibration monitoring system to help its construction industry clients carry out structural monitoring and comply with neighbourhood noise regulations. The firm recently extended the system using Wi-Fi DAQ.

It could extend its monitoring stations by up to 100 metres by using a remote NI WLS-9163 carrier with the NI 9234 instrumentation, which provides IEEE 802.11g (Wi-Fi) wireless connectivity for good flexibility. So, the wireless architecture offered a cost-effective extension to the system.

Wide Range Testing

From environmental monitoring to mountain-bike testing, USB and Wi-Fi DAQ are becoming increasingly popular. So how have these DAQ technologies developed and what should you consider when implementing them?

DAQ often involves multiple tasks, such as analogue I/O, digital I/O and counter/timers running simultaneously. To achieve this, a DAQ device must be able to support multiple streams of data at the same time and have the ability to quickly move data to and from PC memory. Until recently, PCI was the most widely used data acquisition bus and it is still used in the highest performance applications. PCI is ideal for DAQ, providing high bandwidth, low latency, bus mastering and direct memory access (DMA) channels, allowing direct streaming to memory. Additionally, with the introduction of PCI Express, it is now possible to achieve 1GB/s dedicated per-slot, per-direction, bandwidth for very high speed and high-channel-count data streaming applications. However, when portability and ease of deployment are more important than ultimate speed, many engineers now choose to use USB and Wi-Fi.

USB makes it easy to add DAQ functionality to a desktop or laptop PC. The common availability of USB, with more than 2 billion ports delivered worldwide, makes it an obvious choice. Now engineers and scientists can use USB DAQ to quickly share instruments, and systems can become more mobile and compact.

USB presents its own challenges for measurement applications. For example, the 60MB/s theoretical bandwidth of Hi-Speed USB should be sufficient for most DAQ applications; however, there are several obstacles to overcome in designing USB DAQ hardware and software to approach this theoretical limit. USB is a host-driven serial protocol, meaning that the operating system must initiate any data transfer request. This asynchronous data transfer will lower the determinism and increase the CPU overheads. One way to address this is to buffer the data in additional memory on the device. This helps overcome data loss, but increases latency and device cost. What is really needed is a way to support multiple DAQ data streams over USB. On many devices this is limited by the typical on-board system architecture.

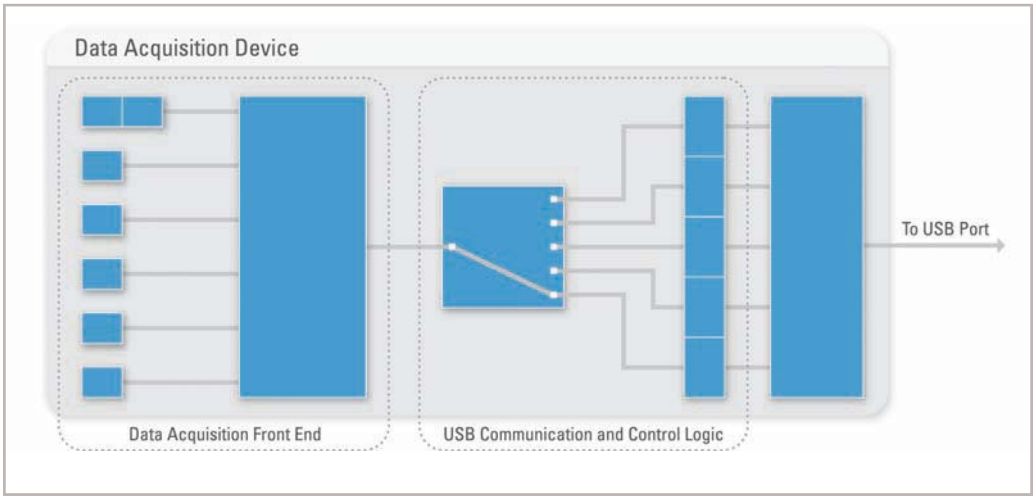

***Figure 1:** The transmission architecture of a DAQ device using standard USB*

Tackling the Limiting Factors

One limiting factor is often the processor used to connect a DAQ device to the USB endpoint. On standard USB systems, this typically is an instruction-based, single-threaded chip that acts like a

Graham Green, Applications Engineer at National Instruments for UK and Ireland goes into technical explanation of how to use a USB and Wi-Fi type of data acquisition

switch. It presents a bottleneck for data, allowing only one stream at once. In order to decrease latency and increase throughput, the host must be able to continuously send data requests to the device. To fulfil these requests, the device must also make data available at the USB endpoint as fast as possible. The traditional 'single stream' architecture cannot do this, but these issues are addressed with new NI USB Signal

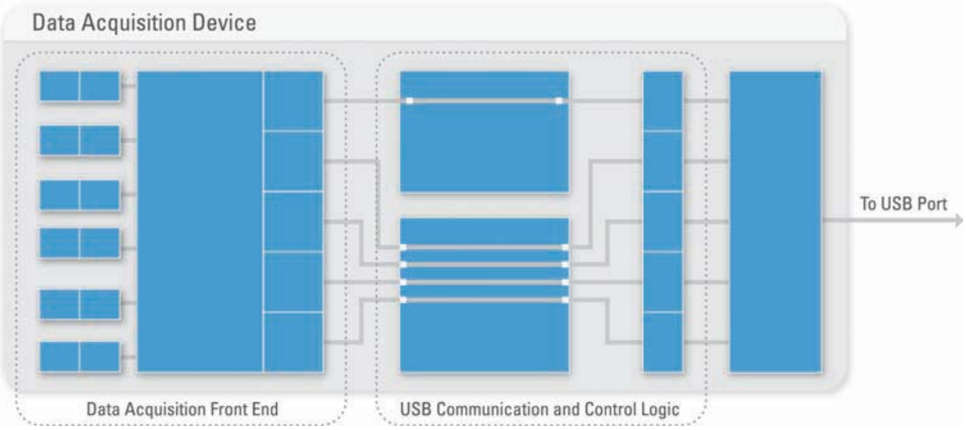

Figure 2: *The transmission architecture of a DAQ device using NI Signal Streaming on USB*

IET

The Institution of Engineering and Technology Centenary Kelvin Lecture

Creating the Invisibility Cloak:
New Horizons in Electromagnetism

LECTURE BY
Professor Sir John Pendry
Condensed Matter Theory Group
Imperial College London

Thursday, 12 March 2009 at 6:00 pm, Savoy Place, London, UK
Tuesday, 17 March 2009 at 6:00 pm, University of Glasgow, Glasgow, UK

Come and celebrate with the IET as the Kelvin Lecture reaches a major milestone in its history. Professor Sir John Pendry will give the one hundredth Kelvin Lecture in the year that the IET also celebrates its centenary year at Savoy Place.

Professor Sir John Pendry is noted for his work on the interaction of electrons and photons with surfaces. He has recently captured the attention of the media as his work has given rise to the potential for invisibility and a perfect lens where the resolution is unlimited by the wavelength of light.

His talk will cover such themes as metamaterials, the creation of a negative refractive index and "cloaking" – the design of materials that hide objects within them, apparently invisible.

This lecture is part of the IET's Prestige Lecture series.
Visit **www.theiet.org/lectures** for all the latest news.

Register your place today at
www.theiet.org/kelvin

Figure 3: *WLS-9163 containing NI-9234 dynamic signal acquisition module*

Streaming technology.

Patented by National Instruments, USB Signal Streaming avoids processor-based switch-like behaviour in favour of a multithreaded approach. Working with the NI-STC 2 system timing controller, the NI Signal Streaming Controller supports four high-speed DMA channels delivering data directly into four USB endpoints. This has the effect of freeing up the processor so it can now accept higher level commands from the host and translate these into the dozens of register-level commands on-board the DAQ device. This minimises the volume of commands from the host and, therefore, decreases latency.

Signal streaming has enabled a single-point acquisition performance increase of 1600% for analogue input and 250% for analogue output. This means for multiple bi-directional data streams running concurrently, National Instruments DAQ devices can achieve over 26MB/s.

Despite these developments, there is still a five metre limit on USB cable length. This length is limited by a cable delay specification of 26ns. As USB uses source termination and voltage mode drivers, this delay is essential to avoid reflections.

The five metre cable is a real physical maximum. Assuming worst-case delay times, a full speed device at the end of five hubs and cables has a timeout of 280ps. Reducing the margin to 0ps would only give you an extra 0.05m. This means USB is impractical for such things as distributed environmental monitoring.

To extend a measurement system over longer distances the traditional solution would be to use one of a range of cabled industrial networks, increasing cost and complexity. As a result, there is now great interest in using wireless as an alternative. The challenge is to implement this new technology, without losing the ease of configuration of USB. This is not just a concern for the designers of new applications, as there are many existing applications that can be extended with wireless.

Saphir's vibration monitoring system mentioned above was initially implemented using USB, but the expense of needing a laptop at every test location prompted the move to Wi-Fi. This move needed to be swift, easy and economical.

Going Wireless

Wireless sensor networks have been around for a number of years, but integrating them has often involved bespoke hardware and proprietary software. This complicates setting up even simple applications, and thus requires greater expense and engineering expertise. Additionally, many existing wireless sensor technologies are geared towards single point measurements, rather than streaming waveform acquisitions. The ideal wireless DAQ solution should provide performance, ease-of-use, reliability and security.

For these reasons, NI chose IEEE 802.11b/g with 128 bit AES encryption and IEEE 802.11i (WPA2) support. The broad adoption of IEEE 802.11 and speed of up to 56Mbit/s provide ease-of-use and sufficient performance to support streaming 100kS/s acquisitions.

IEEE 802.11 also contributes to reliability. The IEEE 802.11 standard specifies an "over-the-air" interface between a wireless client and a basestation or access point, as well as among wireless clients. The standard specifies both the physical layer (PHY) and the Media Access Control (MAC) layer, and is tailored to resolve the compatibility between manufacturers of wireless equipment.

Assembling a wireless DAQ system that does not comply to the IEEE standards can require huge effort and result in unreliable measurements. So what is the IEEE 802.11 standard and what makes it so essential to DAQ?

The basic access mechanism for IEEE 802.11 is a Carrier Sense Multiple Access with Collision Avoidance (CSMA/CA) protocol, similar to Ethernet. Any device wishing to transmit first monitors the physical network; if it is busy (e.g. another device is transmitting), it defers and re-transmits at a later time. If the network is free for a predefined time period (DIFS – distributed inter frame space), it begins transmission. A problem occurs when two devices sense the network is free simultaneously. Each then proceeds to transmit causing a collision.

These collisions can be detected and countered easily within a wired system, such as Ethernet, as all devices can "hear" each other. In a wireless network, a device may sense a free medium for transmissions despite the fact that the desired receiver (placed in a central location) may be busy receiving from another device that is out of range of the first.

In normal operation, the receiver performs a checksum on the message and then sends acknowledgement (ACK) back to the device. If a sending device does not receive acknowledgment it will attempt to resend even though the medium "appears" to be free.

This kind of data protection protocol is essential for DAQ applications, as unlike wireless music or video streaming, any loss of data can cause anomalous results and invalidate any measurements taken. Wireless products that conform to the IEEE 802.11 standards can be considered both reliable and flexible, but in the 400 pages of the standards documentation nothing is said about security

Checking Security

Many applications require security for their data transfer, whether for reasons of national security or to hide data from potential competitors. The language of wireless security can be complex and is littered with even more acronyms. All security is based on various combinations of data encryption and user authorisation.

There have been several encryption standards. First there was WEP (Wired Equivalent Privacy), then WPA (Wi-Fi Protected Access), but both of these have been compromised. The latest Wi-Fi products are compliant with WPA2 and use AES (Advanced Encryption Standard). This uses a 128-bit cipher that is significantly more difficult to crack than the algorithms used by WEP and WPA. In fact, the National Institute of Standards and Technology (NIST) in the US chose AES as the encryption standard that is required for all US government agencies. WPA2 has proven itself as stable and secure for all applications including Wi-Fi DAQ.

Saphir opted to use the National Instruments WLS-9163 Wi-Fi carrier as it complied with IEEE 802.11, as well as WPA2 security. Using the same NI-DAQmx drivers as their previous USB system, they were able to upgrade to Wi-Fi with no code changes. Both the USB and Wi-Fi carriers also used the same C Series platform for acquisition and signal conditioning modules, thus minimising hardware expenditure. This made the transition to the more practical and powerful Wi-Fi system simple and quick.

Wi-Fi can now be relied upon as a simple, secure DAQ option for scientists and engineers in any industry. It has been employed successfully to stream dynamic data in applications where cabled solutions are impractical, impossible or overly expensive.

Scientists and engineers today no longer have to accept bus-imposed limitations on their applications. Instead, through flexible software and easy-to-use drivers, developers can specify the bus of their choice to fit their application needs, from PCI Express with high throughput to USB with its easy plug-and-play configuration, or Wi-Fi with its high flexibility and mobility. The choice now lies with the domain expert to specify a DAQ system that exactly meets their needs. ■

Special DATA Acquisition Board

Maurizio Di Paolo Emilio from Italy presents the first in a series of articles focusing on a data acqusition (DAQ) board project for the management of environmental sensors and a high-speed data acquisition system. This article is an introduction to this new data acquisition board. In the next few articles there will be more information on this project; in particular the analysis of buses (Ethernet, Wireless, VME, USB and GSM) and the structure of the ADC.

WHAT IS a data acquisition board? The simplest answer is that it is a basic analogue-to-digital (A/D) converter coupled with an interface that allows a personal computer to control the actions of the converter (ADC), as well as to capture the digital output information from the conversion. A data acquisition board is designed to plug directly into a personal computer's bus. All the power required for the A/D converter and associated interface components are obtained directly from the PC bus.

The special DAQ board is composed of various slots for the upgrade. It can work with a VME bus but also with USB, GSM, wireless and Ethernet connections.

DAQ board is a special data acquisition system. The principal characteristics of the DAQ board are:

- CPU 2GHz with the Linux operating system for the management of hardware;
- USB port and Ethernet connection;
- VME bus (with one possible solution for GPIB);
- Wireless and GSM connection;
- An FPGA for the execution of logic functions.

It also comprises four slots for the upgrade of the operating system. One of these can be realised for high-speed data acquisition with the ADC MAX109 8-bit 2.2Gpsp from Maxim. The principal uses of this board are:

- High and low speed data acquisition;
- Possibility of managing the data acquisition system of a VME bus;
- Management of data acquisition with programmable logic;
- Management of environmental sensors;
- High-energy physics instrumentation;
- Test and measurement instrumentation.

The Board's Hardware and Software

The goal of this board is to build one complete data acquisition system that can be used in the scientific and industrial fields. The principal elements used here are: a VME bus, USB, wireless, Ethernet and GSM connections.

The VME (Versa Module Europa) bus is a flexible open-ended bus system based on the Eurocard standard. The VME bus was intended to be a flexible environment supporting a variety of compute-intensive tasks, and has become very popular in the computer industry. It is defined by the IEEE 1014-1987 standard.

The bus usage was developed from a computer standpoint, which leads to a completely memory-mapped scheme. Every device can be viewed as an address or block of addresses. Under VME, addresses and data are not multiplexed. A block transfer, however, is possible for DMA style applications.

The bus allows multiple masters and contains a powerful interrupt scheme. A resource manager is required to handle the interrupts. The VME bus is a TTL-based backplane which, although the system is asynchronous, sets the data transfer speed to approximately 20Mbytes per second.

A typical transfer consists of an arbitration cycle (to gain bus control), an address cycle (to select the register) and the actual data cycle. Read, write, modify and block transfers are supported.

The board can be realised as a system controller as used in another data acquisition system that it is also required by VME bus.

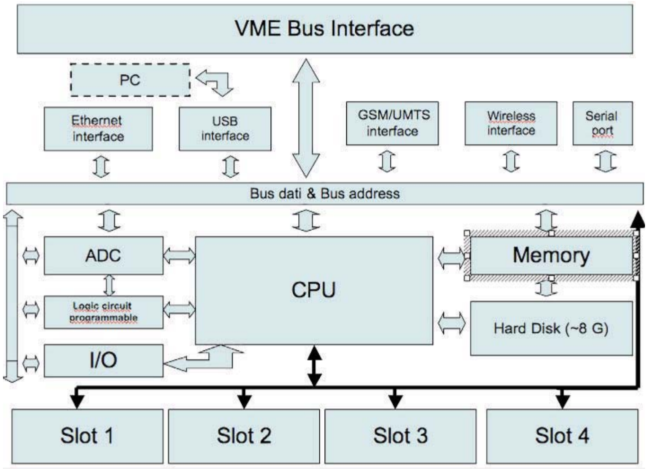

Figure 1: *DAQ board*

PART 1

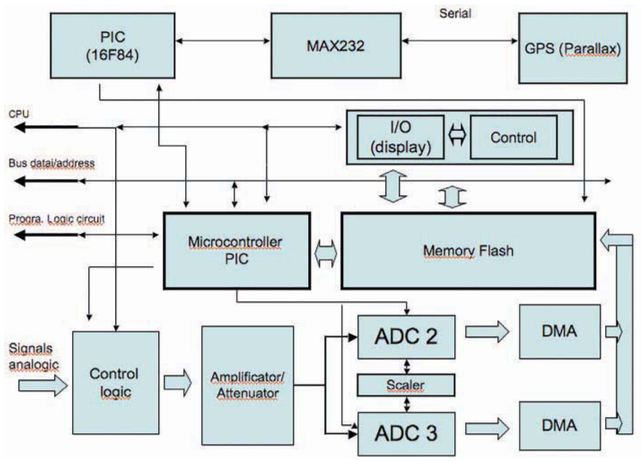

***Figure 2:** Analogue-to-digital converter*

Figure 1 shows the complete outline of board.

For the analogue-to-digital converter the outline proposed is shown in **Figure 2**. I have used a GPS (**Figure 3**) for the synchronisation of time, as well as some ADCs:

- ADS5463 from Texas Instruments (TI);
- ADS8412, also from TI.

The ADS5463 is a 12-bit, 500/550Msps analogue-to-digital converter (ADC) that operates from both a 5V supply and 3.3V supply, while providing LVDS-compatible digital outputs. This ADC is one of a family of 12, 13 and 14-bit ADCs that operate from 210Msps to 550Msps. The ADS5463 input buffer isolates the internal switching of the onboard track and hold (T&H) from disturbing the signal source while providing a high-impedance input.

The ADS54RF63 optimises SFDR to frequencies beyond 1GHz, while allowing clock rates up to 550Msps. The ADS5463 has better noise while maintaining good distortion at speeds up to 500Msps.

The ADS8412 is a 16-bit, 2MHz A/D converter with an internal 4.096Vref. The device includes a 16-bit capacitor-based successive approximation register (SAR) A/D converter with inherent sample and hold. The ADS8412 offers a full 16-bit interface and an 8-bit option, where data is read using two 8-bit read cycles.

The ADS8412 has a unipolar differential input. It is available in a 48-lead TQFP package and is characterised over the industrial -40°C to 85° temperature range. The ADS8412 is a high-speed SAR analogue-to-digital converter (ADC). The architecture is based on charge redistribution, which inherently includes a sample/hold function.

The conversion clock is generated internally. The conversion time of 400ns is capable of sustaining a 2MHz throughput.

The analogue input is provided to two input pins: +IN and –IN. When a conversion is initiated, the differential input on these pins is sampled on the internal capacitor array. While a conversion is in progress, both inputs are disconnected from any internal function.

The GPS

The Global Positioning System (GPS) is a satellite-based navigation system made up of a network of 24 satellites placed into orbit by the US Department of Defense. GPS was originally intended for military applications, but in the 1980s, the government made the system available for civilian use. GPS works in any weather conditions, anywhere in the world, 24 hours a day.

A central processing unit (CPU) is used. The fundamental operation of most CPUs, regardless of the physical form they take, is to execute a sequence of stored instructions called a program.

GSM (Global System for Mobile communications: originally from Groupe Spécial Mobile) is the most popular standard for mobile phones in the world. This board uses a GSM connection for the management of the data acquisition system by the means of SMS (text). In the next generation, the GSM could be substituted by UMTS as the connection.

Universal Serial Bus (USB) is a serial standard bus used to interface devices to a host computer. The simplicity of the USB port is the main motivation behind its use in this board. You can connect the DAQ board to a computer with a USB, for an

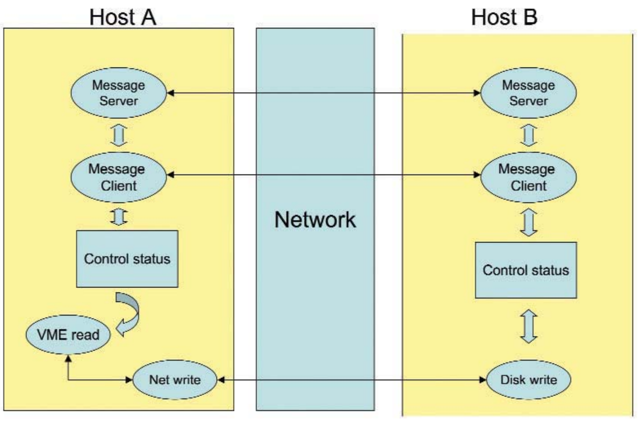

***Figure 3:** GPS*

increased speed, via an Ethernet or wireless connection.

Another simple port that the board is using is the serial port, for setting the board's characteristics (clock, sampling bits, etc). Applications may involve point-to-point communication, point-to-multipoint communication, broadcasting, cellular networks and other wireless networks.

The software of management is done by means of LabVIEW. LabVIEW (short for Laboratory Virtual Instrumentation Engineering Workbench) is a platform and development environment for a visual programming language from National Instruments.

Some considerations on data acquisition systems: is there a software support? Most data acquisition hardware is compatible with most popular industrial software, or it comes with a software package of its own. Free or not, it is a good idea to investigate the software and hardware's capabilities.

Number of analogue input channels: Analogue inputs are usually specified as single-ended or differential input channels. Single-ended (SE) channels all reference the same ground point. Differential inputs (DE) have different reference points for each input and, therefore, need two channels. In general, SE channels are appropriate when the input signals are greater than 1V, the signal source is no more than 15 feet away and all inputs share a common reference. DE inputs have better noise immunity and help prevent ground loops.

Sampling rate: This determines how fast an analogue signal is converted to digital. In general, select a sampling rate that is twice as fast as you need. The operating software of most PC systems causes skew to occur. Skew can approach or even exceed the sampling interval. When this happens, patterns in the data may no longer be accurate or reliable.

Resolution: This determines the smallest value change the system can detect. Most systems have 12 or 16-bit resolution; a 12-bit system resolves 1 part in 4,096, while a 16-bit system resolves 1 part in 65,536. The resolution in engineering units is determined by dividing the measurement span by 4,096 (or 65,536). For example, if you are measuring a voltage signal of 0-1,000V with 16-bit resolution, the smallest change the system can see is ±0.2V (or ±0.015V).

Future Articles

In the next few articles I will report the results of the study and simulation of this board. The board has been studied and projected with LabVIEW, MatLab and Pspice. ■

WIN AN LED-DRIVING CONSTANT CURRENT DEMO BOARD!

Electronics World is offering its readers the chance to win a new demonstration board for LED applications from V•I Chip, Inc., a subsidiary of Vicor Corporation. The constant current PRM™ regulator board demonstrates the precisely regulated current output of the high-power density V•I Chip PRM. These devices deliver 99.7% across the load range, meeting the demands of direct-drive multi-LED applications where the intensity and brightness are controlled by regulating the current through the LEDs. The board can be used as a standalone non-isolated source to provide adjustable current up to 240 W (5 A at 48 V), or combined with V•I Chip VTM™ transformers to provide an adjustable isolated current up to 100 A. Paired PRM+VTM modules use less than 1 W for every 1,000 Lumens generated by the LEDs, enabling high-efficiency applications. This is a perfect complement to using BCM™ bus converters with low-voltage driver ICs for lower power applications such as LED TV backlighting.

The V•I Chip regulator board has Kelvin connections for measuring the efficiency of the V•I Chip components, independent of load connect losses, whilst oscilloscope probe jacks are available for measuring output voltage, including output voltage ripple. The board has fused PRM inputs and provision for mounting an optional V•I Chip pushpin heat sink, as well as system enable and disable.

To enter the prize draw send an email to surope@vicorpower.com, with the subject 'LED Competition' with a description of an application that could make use of the V•I Chip PRM driving LEDs. Your description should be less than 50 words. The winner will be both innovative and make best use of the benefits of the PRM. All entries must be received by April 30th 2009 and the winners name will be published in a subsequent issue of Electronics World.

To enter the prize draw send an email to:

europe@vicorpower.com

with the subject 'LED Competition' with a description of an application that could make use of the V•I Chip PRM driving LEDs. Your description should be less than 50 words. The winner will be both innovative and make best use of the benefits of the PRM. All entries must be received by April 30th 2009 and the winners name will be published in a subsequent issue of Electronics World.

ELECTRONICS WORLD & LANTRONIX

COMPETITION OFFER

Lantronix (www.lantronix.com) is a global leader in secure communication technologies that simplify remote access, management, and control of virtually any electronic device regardless of location. Lantronix innovative solutions enable businesses to make better decisions, based on real-time information and are utilised in almost every vertical market including: security, building and industrial automation, medical/healthcare, IT/data center, government, transportation, pro AV/signage, retail, power and utilities.

In conjunction with Electronics World, Lantronix is offering readers a chance to win one of the SecureLinx Spider™ next generation KVM-over-IP kits, worth over £300. The kit provides secure KVM (keyboard, video, mouse) server management over an IP network. Unlike any other product on the market, Spider offers a flexible, scalable and affordable CAT5-based remote access KVM solution in a cable friendly, compact "zero-U" footprint package. Connected directly to the server, Spider guarantees non-blocked access from any web browser, anywhere, at any time! More cost-effective than traditional KVM, it provides one of the lowest "cost-per-remote-user" server management solutions available. Furthermore no client software or external power supply is required.

For a chance to win a copy of **Lantronix SecureLinx Spider kit**, please answer the following question: **WHAT DOES KVM STAND FOR?** Please send you response to:

lantronix.competition@livewirepr.com

with the following information: Name • E-mail • Job title (student if applicable) • Company/Educational institution • Address (Work or Home to be specified) • Tel No.

Please mark the subject heading as "Electronics World competition entry"

Design of a multichannel temperature data logger with SD card storage

TEMPERATURE is basically the measurement of how hot or cold something is, and it is one of the fundamental entities in any kind of process control. Temperature is also a measure of the average kinetic energy of particles in a system. Adding heat to a system increases the kinetic energy of its particles and hence an increase in the temperature of the system.

Temperature is easily measured using a thermometer. Nowadays, thermometers come in all shapes and sizes. In computer-based automated process control applications, where it may be required to control the temperature of a plant, it is necessary to interface the thermometer to the computer. This is usually done either by using analogue temperature sensor devices (such as thermistors, thermocouples, RTD devices etc) and then converting the outputs into digital format using A/D converters, or digital sensors (such as semiconductor sensor chips) are used with direct interface to the computer's.

A Selection of Temperature Data Loggers

There are many applications where one needs to store the variation of temperature with time continuously over a long period of time. In such applications it is common to use temperature data logging devices. There are many types of temperature data logging devices in the market with prices ranging from tens of dollars to over thousands of dollars. Examples include Squirrel OQ610 (**www.tempcon.co.uk**), which is a 6-channel temperature data logger using thermocouple probes. The device is battery-operated and up to 260,000 temperature readings can be stored in its non-volatile memory.

The TH-03 temperature data logger (**www.picotech.com**) is a 3-channel resistive logger with PC interface and ±0.3˚C accuracy. The device is connected to the serial port of a PC and sends the temperature readings to the PC where the data can be analysed using the supplied software.

The USB-5201 (**www.microdaq.com**) is an 8-channel temperature data logger with Compact Flash card for data storage. Temperature is measured using thermocouple probes. The device is supplied with a number of software packages for data analyses and it can also provide high/low alarms. In addition, 8-bits of digital I/O pins are provided. Although the device is very powerful its cost is over $600, typically only afforded by professional organisations.

OM-EL-USB (**www.omega.co.uk**) is a small, low-cost, USB type temperature data logger which plugs into the USB port of a PC to collect temperature data. The device has built-in memory that can store 16,000 temperature readings over a single channel. The logging interval can be changes from 12 seconds to 12 hours. Although the device is low-cost, its memory is limited.

Interested readers should note that other devices in the same family have higher memory capacities. For example OM-EL-USB4 (**www.winling.com.tw/OM-EL-USB.pdf**) is supplied with a memory that can store up to 32,000 temperature readings.

TL-500 (**www.audon.co.uk**) is a wireless temperature logging device with a USB based receiver and up to 50 remotely located transmitters with a range of 20-40 metres. The receiver has built-in memory and can operate standalone. The measurement interval is 45 seconds and data can be collected for over 110 days using one channel only. Wireless sensors are useful in remote applications which may be difficult to reach easily.

MCU-Based Design

This article describes the design of a microcontroller-based multichannel temperature data logger device with real-time clock chip and an SD card for the storage of very large amount of data. One of the nice features of the device is that it is based on the 1-Wire bus where a large number of temperature sensors can all be connected on the same bus.

A battery-operated RTC chip keeps the real-time clock information and the temperature is written on the SD card with real-time clock stamp. Each sensor on the bus has a unique 64-bit ID and a sensor responds only when its own ID is on the bus, thus enabling the data to be read selectively.

The RTC data, data logging interval and the ID of each sensor can be set by connecting the device to the serial port of a PC and running terminal emulation software on it. Once the device is configured it can be operated standalone to collect and save the temperature from a large number of sensors. The collected data can then be imported offline into a spreadsheet package such as Excel, and statistical analysis can be carried

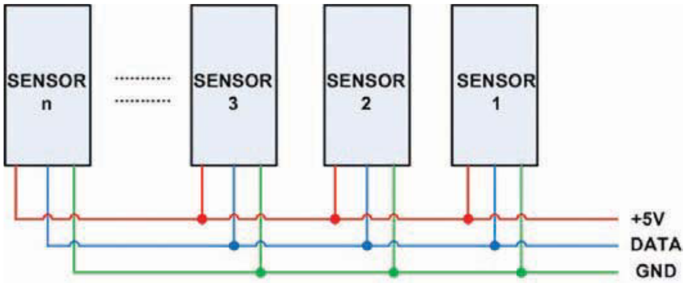

Figure 1: *1-Wire bus structure*

Professor Dr Dogan Ibrahim from the Department of Computer Engineering at the Near East University in Cyprus describes the design of a microcontroller-based multichannel temperature data logger device with SD card storage and real time clock interface

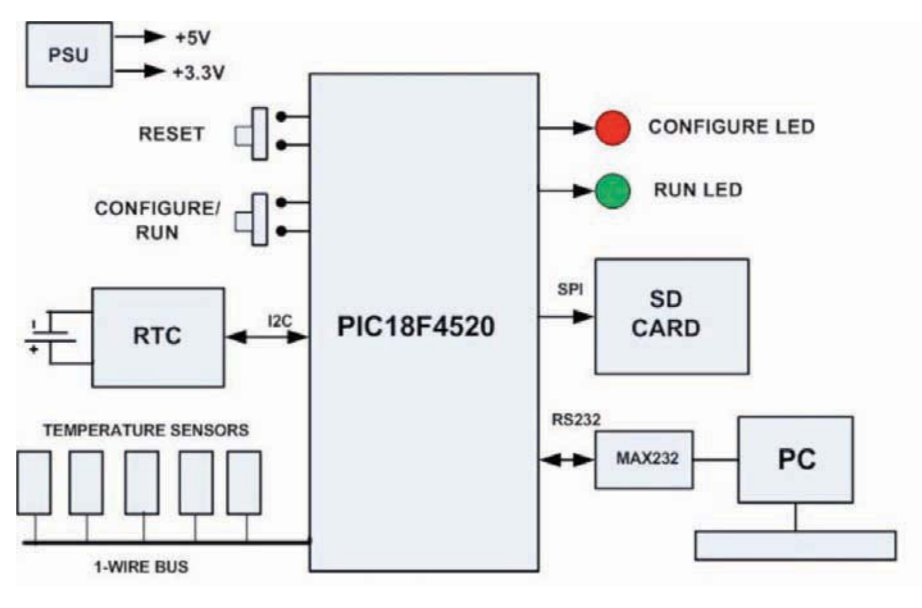

Figure 2: *Block diagram of the temperature data logger*

out, or graphs of the collected data can easily be drawn.

The device also sends out from its serial port the same data as written to the SD card. Thus, it is also possible to capture this data on a PC and perform online analysis of the data in real-time.

1-Wire Bus

1-Wire bus is a serial protocol using a single data line (plus ground reference) for communication. 1-Wire bus provides low-speed data rate and is similar in concept to I2C bus, but with lower data rates and longer range. It was developed by Dallas Semiconductors (**www.maxim-ic.com**) as a means of connecting a large number of sensors over a long distance to a single bus complete with integrated power source.

There are many 1-Wire supported devices, such as temperature sensors, humidity sensors, pressure sensors, switches, counters, real-time clock chips, EEPROM memories, A/D converters and so on.

Depending on the 1-Wire device used, there are two ways to power a device on the bus: parasitic mode and external power mode. In parasitic mode, a capacitor is charged in each device during the logic high state of the data line. The capacitor then provides power to the device during its normal operation and is re-charged whenever the data line is at logic high. In this configuration, the 1-Wire bus consists of only two wires, data and ground. If there are many devices on the bus then a current source may be required to feed the bus to charge the capacitor of each device. Parasitic mode is normally used in small applications with only a few devices on the bus.

In external power mode, a third wire is used to supply the 5V directly to each device and this mode is recommended in large 1-Wire networks.

Dallas recommends that unshielded CAT5 cables should be used as the 1-Wire bus. Shielded cables should not be used as the network may be upset as a result of the increased capacitance. For small network applications and short runs, standard telephone cables can be used for the bus. The design and layout of the cabling is also important to avoid any timing, loading, or reflection problems. In small networks, star or radial connections can be used where each device is connected to a central point with its own cable. In large networks, the recommended method is to use daisy chaining where a single continuous cable is used to loop from sensor to sensor, as shown in **Figure 1**.

In a typical application, a 1-Wire master initiates communication on the bus and controls the bus with one or more slave devices present on the bus. Each device on the bus has a unique, factory programmed and unalterable 64-bit identification number (ID). When there is communication on the bus, only the device with the referenced ID responds to the request. When there is only one slave device on the bus the ID can be "skipped" and the device will respond to all requests on the bus.

The 64-bit ID consists of 1-byte family code, 6 bytes serial number and 1 byte CRC code.

Each device type has a unique family code. For example, the family code of DS1820 temperature sensor devices is 0x10. The serial number uniquely identifies the device. The CRC byte is used to detect any errors in sending the ID.

The ID of a device is not supplied by the manufacturer, but it can be found easily when there is only one device on the bus, for example by writing a program to read and display the ID on an LCD. When there is more than one device on the bus it is much more difficult to find the ID of each device and special algorithms are needed to determine the ID of each device. Alternatively, a 1-Wire Evaluation Kit, such as the DS9090K (**www.maximic.com/quick_view2_cfm/qv_pk/4135**) can be used to find the ID of all devices on the bus. The evaluation kit is plugged into the USB port of a PC and is supplied with a Java program named OneWireViewer.

DS1820 1-Wire Temperature Sensor

Although there are several types of 1-Wire temperature sensors, the DS1820 chip is used in this design. DS1820 is a 3-pin sensor with the following specifications:

- 3-pin chip
- Direct 1-Wire interface with no external components
- Measures temperatures from -55°C to +125°C in 0.5°C increments
- User definable, non-volatile temperature alarm settings
- 9-bit digital output
- 200ms conversion time.

In addition to the normal temperature measuring functions, the DS1820 (**www.systronix.com/Resource/ds1820.pdf**) can be used in thermostatic control applications in industrial systems, for example to set temperature limits with alarm outputs.

The output of DS1820 is in 16-bits sign extended two's complement format, but for practical applications only 8-bits define the temperature and the ninth bit is used to indicate the sign, as shown in **Table 1**. It is possible to obtain much more accurate temperature readings from the device by using the on-chip counter values, but this application is beyond the scope of this paper.

The conversion of the read digital value to actual temperature in degrees Celsius is straight forward; for positive readings, simply divide the value read by 2. For example, if the 9-bit reading is "0 00110010" (i.e. decimal 50), dividing by 2 gives the temperature as +25°C.

For negative readings, take the complement of the reading, add 1 and then divide by 2. For example, if the 9-bit reading is "1 11001110", taking the complement and adding 1 gives "0 00110010", dividing by 2 we get the temperature as -25°C.

TEMPERATURE	DIGITAL OUTPUT
	0 11111010
+25°C	0 00110010
+0°C	+125°C
-25°C	1 11001110
-55°C	1 10010010

***Table 1:** DS1820 output data format*

DS1820 contains an 8-byte scratchpad register where the converted temperature is stored in the first two bytes. A typical temperature conversion process consists of the following steps.

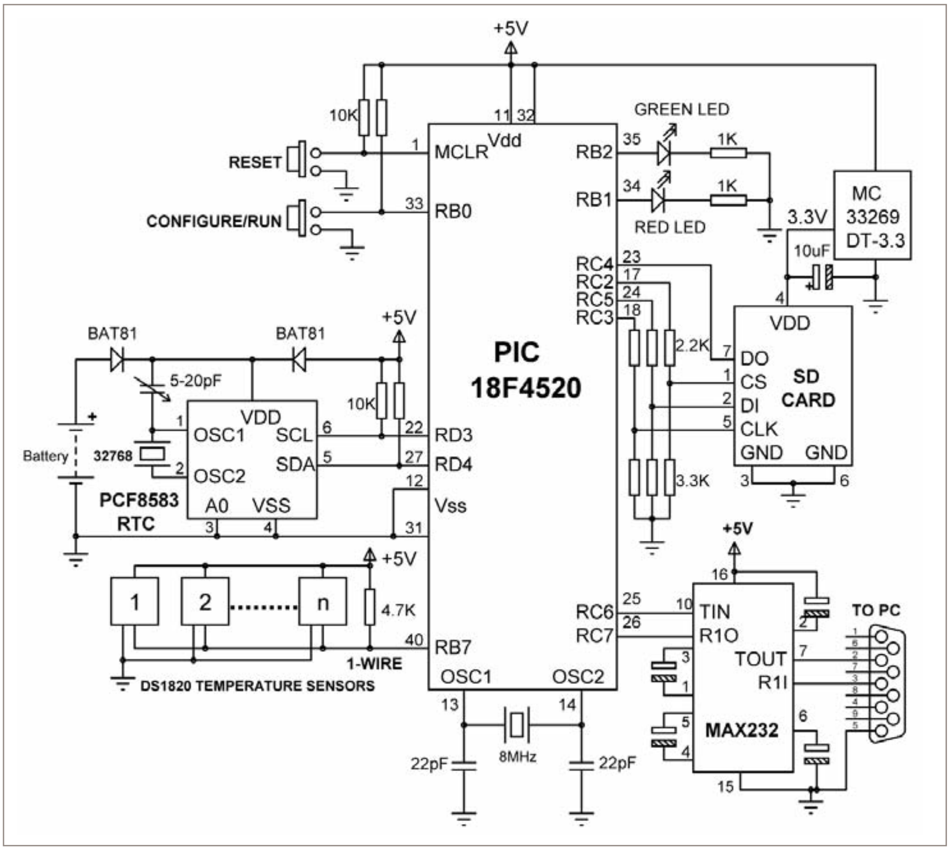

***Figure 3:** Circuit diagram of the temperature data logger device*

For a single DS1820 on the bus:

- Send "SKIP ROM" command (0xCC).
- Send convert temperature command (0x44)
- Wait for the conversion (it can take up to 400ms)
- Send the read temperature command. First of all, send the "SKIP ROM" command (0x55), followed by the READ SCRATCHPAD command (0xBE).
- Read the low-byte and high-byte of the temperature from the scratchpad register.

For more than one DS1820 on the bus:

- Send the "MATCH ROM" command (0x55), followed by the 64-bit device ID to the required device.
- Send convert temperature command (0x44)
- Wait for the conversion (it can take up to 400ms)
- Send the read temperature command. First of all, send the "MATCH ROM" command (0x55), followed by the 64-bit device ID, and then the READ SCRATCHPAD command (0xBE).
- Read the low-byte and high-byte of the temperature from the scratchpad register.

Design of the Temperature Logger

The data logger is designed around a PIC18F4520 (**www.microchip.com**) type microcontroller. This is a highly powerful PIC18 series microcontroller having the following basic features:

- 40-pin package
- 32 K-byte flash program memory
- 1536 byte RAM memory
- 256 byte EEPROM memory
- 36 I/O pins
- 13 channel, 10-bit A/D converter
- Analogue comparators
- 4 Timer/counters
- Prioritized interrupts
- SPI, I2C, USART support
- Operation up to 40MHz
- 8 x 8 hardware multiplier
- C compiler optimized
- Sleep/Idle mode.

The block diagram of the temperature data logger device is shown in **Figure 2**. The user controls the device with two push-button switches: Reset and Configure/Run. Reset simply resets the device to a known state.

When in Configuration mode the date and time of the RTC and various logger parameters can be set through the RS232 port using a terminal emulation program on a PC.

In Run mode, the device reads the temperature from all the sensors attached to the 1-Wire bus and stores the date/time and the temperature in degrees Celsius in a file on the SD card. The data is stored in a format compatible with the Excel spreadsheet.

The Hardware

The circuit diagram of the temperature data logger device is shown in **Figure 3**. At the centre of the circuit is a PIC18F4520 microcontroller, operated with an 8MHz crystal. A PCF8583 (**www.nxp.com**) type real-time clock (RTC) chip is connected to port pins RD3 and RD4 using pull-up resistors. The RTC chip is operated in I2C bus mode and a small battery is used to power the chip to retain the date and time information when external power is not available.

The SD card is connected to port pins RC2 through RC5 and is operated in SPI mode. A card holder is used to physically make connections to card pins. The voltage at output pins of the microcontroller is too high and can damage the input circuitry of the SD card. A pair of potential divider resistors (using 2.2K and 3.3K resistors) is used to lower the microcontroller output voltages to a level acceptable by the SD card inputs. The SD card is powered using a 3.3V regulated supply, obtained using a MC33269DT-3.3 (**www.volkin.com/MC33269DT-3.3.html**) type regulator.

A MAX232 (**www.maxim-ic.com/quick_view2_cfm/qv_pk/1798**) level converted chip is used to obtain RS232 compatible signals from the device. This serial port is used to set the RTC date and time and also configure various parameters used in the design. The date/time and the temperature data are sent to the serial port at the requested intervals, as well as being stored on the SD card.

The Operation

The device is operated by the Reset and Configure/Run buttons. There are two operating modes: Configuration mode and Run mode.

Configuration mode: This mode is entered by pressing and releasing the Reset button while holding down the Configure/Run button. In this mode, the RS232 port should be connected to a PC and a terminal emulation program (e.g. HyperTerm) should be used on the PC to establish communication with the logger device. The default communication parameters are: 2400 Baud, 8 bits and No parity bit.

In the Configuration mode the user is displayed a MENU with the options to either set the configuration, or to display the current configuration. **Figure 4** shows a typical display in Configuration mode. The following parameters can be set or displayed in this mode:

- RTC date and time
- Data logging interval (in minutes)
- Number of sensors used
- 64-bit ID of each sensor (must be entered as 16 hexadecimal numbers).

The red LED is turned on when the device is in the Configuration mode.

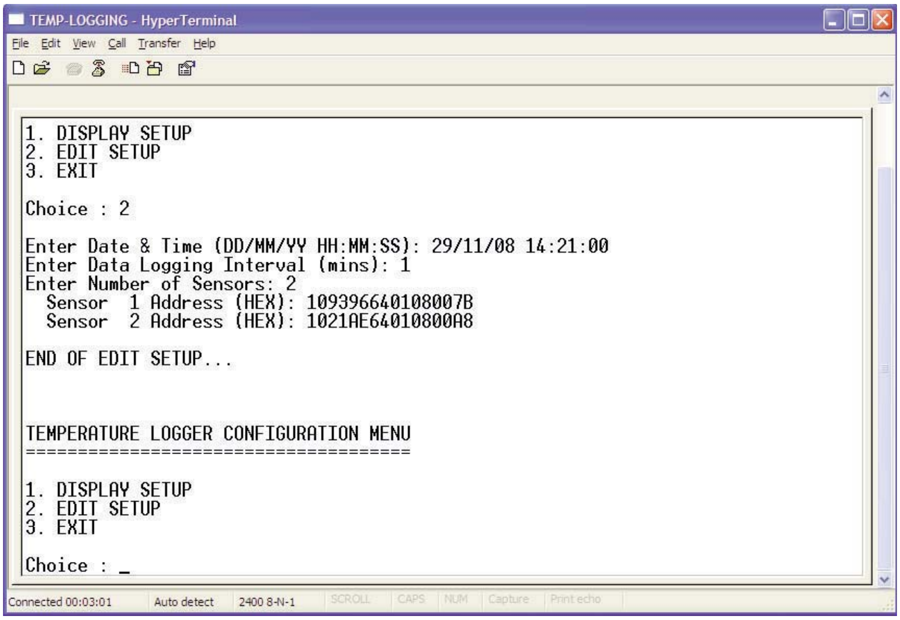

```
1. DISPLAY SETUP
2. EDIT SETUP
3. EXIT

Choice : 2

Enter Date & Time (DD/MM/YY HH:MM:SS): 29/11/08 14:21:00
Enter Data Logging Interval (mins): 1
Enter Number of Sensors: 2
  Sensor  1 Address (HEX): 109396640108007B
  Sensor  2 Address (HEX): 1021AE64010800A8

END OF EDIT SETUP...


TEMPERATURE LOGGER CONFIGURATION MENU
=====================================

1. DISPLAY SETUP
2. EDIT SETUP
3. EXIT

Choice : _
```

Figure 4: *The Configuration mode is entered by pressing and releasing the Reset button while holding down the Configure/Run button*

Run mode: The Run mode is entered after either pressing the Reset button, or applying power to the device. In this mode the device checks the presence of the SD card and, if the card is missing, both red and green LEDs are turned on to indicate an error condition and the logger is halted.

If, on the other hand, a card is detected in the card holder, the green LED is turned on to indicate that data logging has started. The device reads the temperature from all sensors on the 1-Wire bus at the requested intervals. The temperature, together with the current RTC date and time are stored in a file on the SD card, as well as sent to the RS232 port. Data logging stops when the Configure/Run button is kept pressed for about five seconds. The SD card should only be removed after the data logging is stopped.

A new file is created on the SD card each time a new logging session starts. The filename is unique and is made up of the current day, month, hours and minutes and is given the extension ".TXT". For example, if the logging session is started on the 12th of March, at 5 minutes past 10 o'clock, the filename will be "12031005.TXT".

Data is stored on the SD card (and also sent to the RS232 port) in the following format:
dd/mm/yy hh:mm:ss pp.p qq.q rr.r ss.s ....
where dd/mm/yy/ hh:mm:ss is the current date and time, and pp.p qq.q rr.r ss.s are the temperature read from the sensors.

Figure 5 shows the data stored on the SD card in a typical session. In this example there were only two sensors on the 1-Wire bus and the sensors were initially read on the 29/11/2008 at 14:29:01. The temperatures of both sensors were initially 22.5°C.

```
29/11/08 14:29:01,22.5,22.5
29/11/08 14:30:01,31.5,23.5
29/11/08 14:31:01,31.0,24.0
29/11/08 14:32:01,25.5,23.5
29/11/08 14:33:01,26.0,23.5
29/11/08 14:34:01,28.0,23.5
29/11/08 14:35:01,28.5,28.0
29/11/08 14:36:01,24.5,24.0
29/11/08 14:37:01,23.5,28.0
29/11/08 14:38:01,28.5,24.0
29/11/08 14:39:01,27.0,27.5
29/11/08 14:40:01,24.0,29.0
29/11/08 14:41:01,23.5,24.0
29/11/08 14:42:01,23.5,23.5
```

Figure 5: *Typical data stored on the SD card*

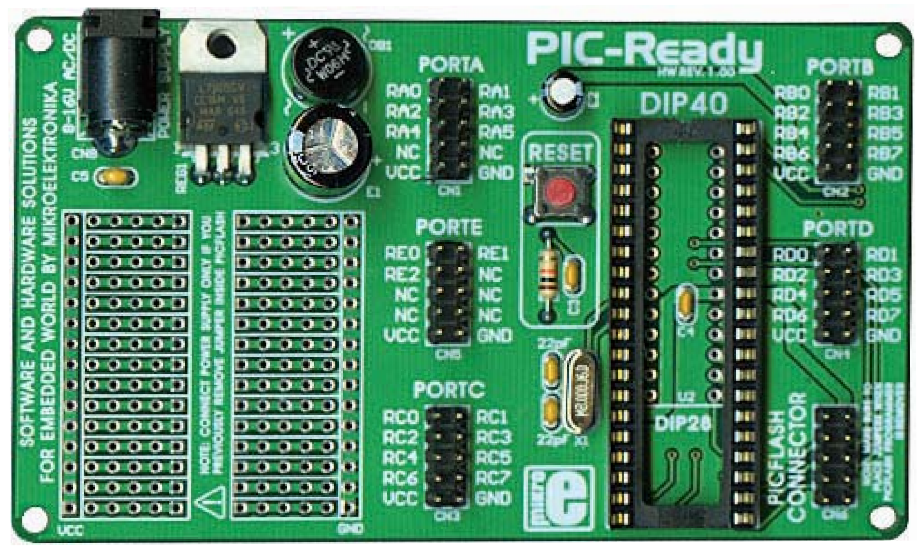

Figure 6: *PIC-Ready development board*

Construction

The hardware was constructed on a PIC-Ready (**www.mikroe.com**) development board (see **Figure 6**), manufactured by mikroElektronika. This is a low-cost ($24.00) powerful development board with the following features:

- Socket for 40-pin PIC microcontrollers
- 8MHz crystal
- +5V regulator (an external 9-12V power supply is required)
- In-circuit debugger (ICD) and PIC programmer interface
- Reset button
- Easy access to port pins via 10-way IDC connectors
- Plug-in compatible with most mikroElektronika development modules
- Small development solder area.

One of the nice things about PIC-Ready development board is the built-in ICD and the programmer. This requires the use of a PICFlash2 ICD device, manufactured by mikroElektronika. During program development one can easily insert breakpoints or single step a program with the help of the ICD. The ICD can also program most of the PIC chips on-board, without having to remove the chip from its socket. This feature is extremely useful during program development.

The RTC module is available from mikroElektronika as a plug-in module and this was connected to the PIC-Ready board.

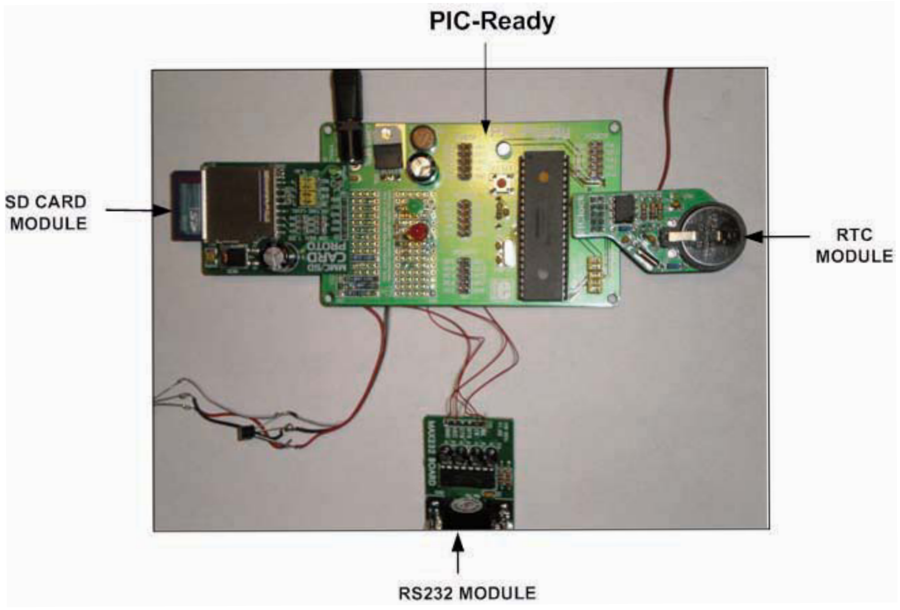

Figure 7: *Data logger development system*

Similarly, the SD card module and RS232 modules were connected to PIC-Ready by making the necessary wirings. Two external LEDs and a push-button switch were connected to the board. **Figure 7** shows the complete data logger development system, built around the PIC-Ready development board.

The Software

The software was developed using the mikroC compiler (**www.mikroe.com**) developed by mikroElektronika. This is a very powerful C language compiler developed for PIC microcontrollers and supports both PIC16 and PIC18 series. The compiler provides a very rich library of routines for developing applications for SD cards, Compact Flash cards, RS232/RS485 devices, USB, CAN bus, I2C, 1-Wire bus and much more.

Figure 8 shows operation of the software as a Program Description Language (PDL). The program is modular and consists of a number of functions and procedures for easy modification, update, or maintenance of the code. The following functions and procedures are used:

Initialize_RTC:	Initialises the I2C bus
Read_RTC:	Reads the RTC date and time and stores in array RTCData
Write_RTC:	Updates the RTC date and time from array USART
Send_Text:	Sends a text message to USART
Read_Usart:	Reads text from USART until carriage-return is detected
Send_Newline:	Sends a carriage-return and new-line to USART
Display_Setup:	Display configuration parameters on serial port
Edit_Setup:	Modifies the configuration parameters from serial port
MENU:	Displays MENU on serial port
Initialize_SD:	Initialises the SPI bus
Hex_Byte:	Converts a single character into decimal
Conv_Hex:	Converts hex bytes into decimal
Read_Temps:	Reads temperature data from sensors
Trim:	Removes spaces from a text
Format_Temp:	Formats the temperature data, writes to the SD card, and also sends to the RS232 port.

At the beginning of the program port directions are configured, USART is initialised and so is the I2C bus. The I2C bus is controlled using the Software I2C Library routines of mikroC compiler.

The program then checks to find out whether or not the Configuration/Run button is down, and if so, enters the configuration mode. In this mode, a MENU is displayed (see Figure 4) and the user has the option of either displaying the current configuration parameters or to modify these parameters.

The configuration parameters are stored in the EEPROM memory of the microcontroller so that they are not lost after the removal of the power. The layout of the configuration parameters in the EEPROM is shown in **Table 2**. Location 0 stores the year field of the RTC. Location 1 stores the data logging interval in minutes. Location 2 stores the number of DS1820 type sensors connected to the 1-Wire bus. The remaining locations of the EEPROM are used to store the 64-bit ID of each sensor.

Each sensor ID consists of 8 bytes (16 hexadecimal letters), occupying 16 locations of the EEPROM memory. Thus, the first sensor ID starts at location 3 and terminates at location 18. Second sensor ID starts at location 19 and terminates at location 34, and so on.

When the device is in Run mode, a new file is opened on the SD card, RTC date and time are read, temperature data are read from sensors and then all of this data are written to the opened file. The same data are also sent to the serial port of the microcontroller.

The data logging activity is terminated when the Configure/Run button is kept pressed down for about five seconds. At this point the Run LED is turned off and the SD card can be removed from its adapter safely.

EEPROM ADDRESS	EEPROM CONTENTS
0	RTC year
1	Logging interval (mins)
2	Number of sensors used
3	Sensor 1 ID
....	....
....	....
18	Sensor 1 ID
19	Sensor 2 ID
....	....
....	....
34	Sensor 2 ID
....	....

***Table 2:** Microcontroller EEPROM layout*

```
Main Program:
BEGIN
Initialise port directions
        Initialise USART
        Initialise I2C bus
        Declare and initialise program
variables

        IF Configuration/Run pressed
                Call Configuration Mode
        ELSE
                Call Run Mode
        END IF
        END


Configuration Mode:
        BEGIN
        Turn on Configuration LED (red)
        DO FOREVER

                Display MENU
1.      Display Configuration
2.      Edit Configuration
3.      Edit
Choice:
        IF Choice = "1"
                Display Configuration
        ELSE IF Choice = "2"
                Edit Configuration
        ELSE IF Choice = "3"
                Wait to enter Run mode
        END IF
        END


Display Configuration:
        BEGIN
        Display date and time
        Display logging interval
        Display number of sensors
        Display ID of each sensor
        END


Edit Configuration:
        BEGIN
        Read Date and Time
        Update RTC chip
        Read logging interval
        Read number of sensors
        Read ID of each sensor
        Store configuration in EEPROM
        END


Run Mode:
        BEGIN
        IF SD card missing
                Turn off both LEDs
                Error - Halt
        END IF
        Turn on Run LED (green)
        Initialise SPI bus
        Create a new file on SD card

        DO
        Read temperature from sensors
        Read date and time from RTC chip
        Save RTC data and temperatures on
        SD card
        Send RTC data and temperatures to
        serial port
        UNTIL Configuration/Run button is
        kept pressed for 5 seconds
        END
```

***Figure 8:** Operation of the software*

Importing to Excel

The data stored on the SD card is compatible with the Excel spreadsheet and can easily be imported into Excel for either statistical calculations or for drawing graphs of the change of temperature with time. The analysis can either be carried out Offline, where the data stored on the SD card is used, or Online, where the data is analysed in real-time as it is captured from the data logger. Both methods are described here.

'Offline' Analysis

The steps for drawing a graph of the change of temperature for sensor 1 are given below:

- Start the Excel package
- Insert the SD card into an adaptor so that it can be read on a PC.
- Open the required temperature ".TXT" file on the SD card. Select File -> Open
- Select Delimited and click Next
- Select Delimeters as Space and Comma, and click Next
- Click Finish. You should see the collected data in an Excel sheet
- Highlight the time column (column B) and sensor 1 output column (column C)
- Click Chart Wizard icon in top menu
- Click Finish to select the default graph type (Bar chart)
- Click on the graph. Select Chart → Chart Options to enter the axes titles
- The graph of the change of temperature will be drawn as in **Figure 9** (this data was collected on the 29th of November at 14:28.

The graphs of other sensors, or multiple sensors on the same graph, can easily be drawn with the Excel package. In addition, other types of graphs can be drawn, or the data can be analysed statistically, for example to find the maximum and minimum temperature in a given date and time interval, or the average, or the standard deviation of the temperature in a given interval, and so on.

'Online' Analysis

The data logger also sends data to its RS232 serial port at the requested intervals (see **Figure 10**) and it is possible to develop a program on the PC (e.g. using Visual Basic) to capture this data from the serial port dynamically and then draw the graph of the change of temperature with time as it happens. Such an application would be very useful in real-time temperature monitoring and control applications where it may be required for example to know the temperature of an oven at any instant of time, or to know the trend of change in the temperature.

1-Wire Bus Device

The design of a microcontroller-based multichannel temperature data logger device, based on the 1-Wire bus has been described. The program code of the device is general and allows any number of temperature sensors to be connected to the 1-Wire bus, with a maximum bus length of several hundred meters.

Using one channel only, and logging every minute, the device writes about 36K of data to the SD card every day. Thus, with a 1GB SD card and providing the device is operated from a continuous power source, the data collection period is many years.

One of the problems with portable SD card based projects is that writing to the card draws high current from the battery and thus high capacity batteries (or a suitable mains adaptor if possible) should be used in applications where data is to be collected for long periods of time.

There are many types of 1-Wire devices in the market and the device described here can be expanded by the addition of other 1-Wire devices such as, humidity and pressure sensors, switches, counters, A/D converters EEPROM memories etc. Such an expansion will require modifications to the existing software code to read, format, and then store the relevant data on the SD card. ■

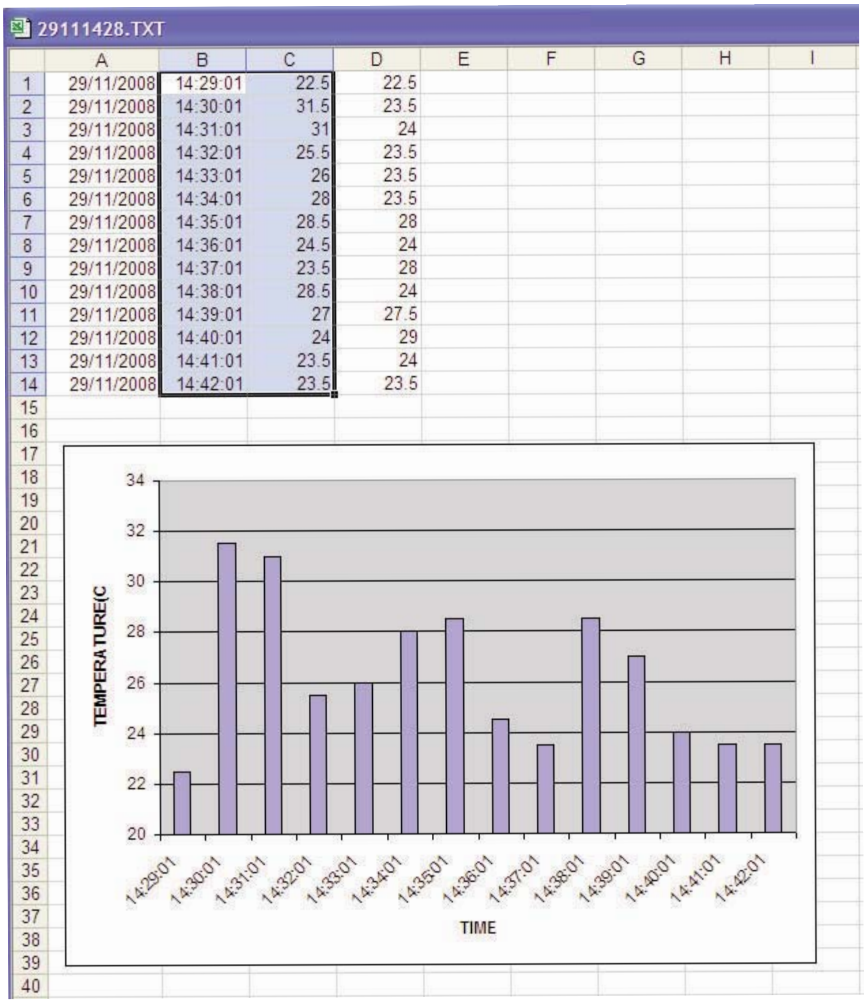

	A	B	C	D
1	29/11/2008	14:29:01	22.5	22.5
2	29/11/2008	14:30:01	31.5	23.5
3	29/11/2008	14:31:01	31	24
4	29/11/2008	14:32:01	25.5	23.5
5	29/11/2008	14:33:01	26	23.5
6	29/11/2008	14:34:01	28	23.5
7	29/11/2008	14:35:01	28.5	28
8	29/11/2008	14:36:01	24.5	24
9	29/11/2008	14:37:01	23.5	28
10	29/11/2008	14:38:01	28.5	24
11	29/11/2008	14:39:01	27	27.5
12	29/11/2008	14:40:01	24	29
13	29/11/2008	14:41:01	23.5	24
14	29/11/2008	14:42:01	23.5	23.5

Figure 9: *Offline analysis of the collected temperature data*

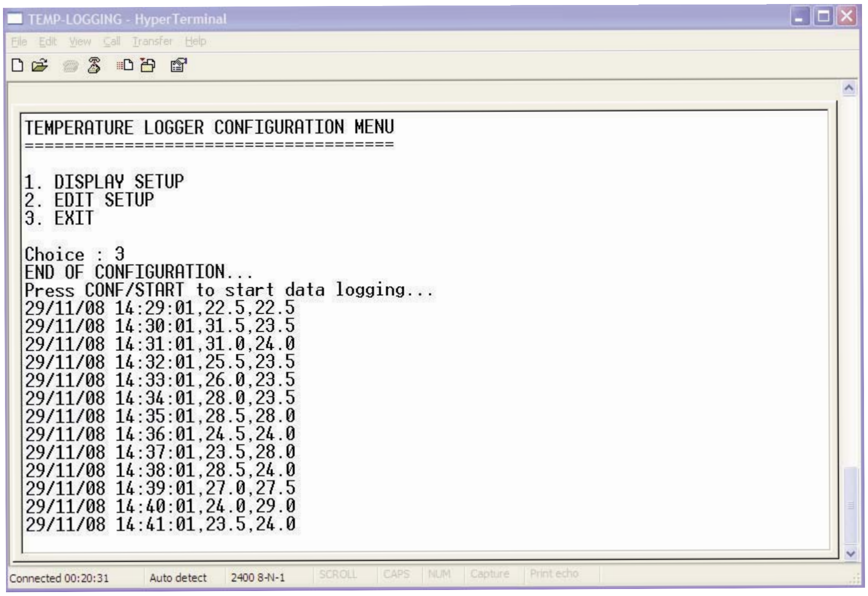

```
TEMPERATURE LOGGER CONFIGURATION MENU
=====================================

1. DISPLAY SETUP
2. EDIT SETUP
3. EXIT

Choice : 3
END OF CONFIGURATION...
Press CONF/START to start data logging...
29/11/08 14:29:01,22.5,22.5
29/11/08 14:30:01,31.5,23.5
29/11/08 14:31:01,31.0,24.0
29/11/08 14:32:01,25.5,23.5
29/11/08 14:33:01,26.0,23.5
29/11/08 14:34:01,28.0,23.5
29/11/08 14:35:01,28.5,28.0
29/11/08 14:36:01,24.5,24.0
29/11/08 14:37:01,23.5,28.0
29/11/08 14:38:01,28.5,24.0
29/11/08 14:39:01,27.0,27.5
29/11/08 14:40:01,24.0,29.0
29/11/08 14:41:01,23.5,24.0
```

Figure 10: *Data sent to the microcontroller serial port*

RADIO MODULES FOR WIRELESS DATALINKS

Radiometrix continues to be recognised as the leading manufacturer of wireless datalinks for a wide variety of applications: it brings to market high-quality yet cost effective VHF & UHF low power radio modules that cater for the needs of OEMs manufacturing for international wireless data transmission industries.

Products available include:

- Narrow Band and Wide Band FM Transmitters, Receivers and Transceivers
- Single Channel and Multi-channel operation
- UHF and VHF ISM bands
- Custom design service
- Encoders and Decoders for RF remote control
- Radio Packet Modems
- Radio Packet Controllers
- Evaluation Kits

Applications include:

- Security & Alarm
- Telecommand or Remote Control
- Telemetry
- Industrial and Commercial
- Data Logging
- Automatic Meter Reading (AMR)
- Tracking

Radiometrix Ltd
Hartcran House
231 Kenton Lane
Harrow, Middlesex
HA3 8RP UK

Tel: +44 20 8909 9595
Fax: +44 20 8909 2233
sales@radiometrix.com

RADIOMETRIX

20 YEARS OF INNOVATION FROM THE PIONEERS IN WIRELESS

www.radiometrix.com

---

www.stewart-of-reading.co.uk

OSCILLOSCOPES ON EXTRA SPECIAL OFFER

(For Limited Period Only)

TEKTRONIX		
465	Dual Trace 100MHZ Delay Sweep	£75
465B	Dual Trace 100MHZ Delay Sweep	£95
466	Dual Trace 100MHZ Analogue Storage	£75
468	Dual Trace 100MHZ Delay Sweep Digital Storage	£125
475	Dual Trace 200MHZ Delay Sweep	£110
2214	4 Ch. 20MHZ Analogue 1 MS/S	£95
2215A	Dual Trace 60MHZ Delay Sweep Dual TB	£95
2220	Dual Trace 60MHZ Digital Storage. Cursors	£125
2225	Dual Trace 50MHZ	£95
2230	Dual Trace 100MHZ Digital Storage. Cursors	£195
2235	Dual Trace 100MHZ Dual TB	£150
2235A	Dual Trace 100MHZ Dual TB	£175
2236	Dual Trace 100MHZ Dual TB with Counter Timer & DMM	£175
2236A	Dual Trace 100MHZ Dual TB with Counter Timer & DMM	£195
2245A	4 Ch. 100MHZ Dual TB Delay Sweep. Cursors	£195
2430	Dual Trace 150MHZ 100 MS/S	£250
2445	4 Ch. 150MHZ Delay Sweep. Cursors etc	£195
2445A	4 Ch. 150MHZ Delay Sweep. Cursors etc	£225
2445B	4 Ch. 150MHZ Delay Sweep. Cursors	£250
2445B	With DMM 4 Ch, 150MHZ Delay Sweep .Cursors	£250
2465	4 Ch. 300MHZ Delay Sweep. Cursors etc	£300

2465A	4 Ch. 350MHZ Delay Sweep. Cursors etc	£400
2465B	4 Ch. 400MHZ Delay Sweep. Cursors etc	£500
2465B	Rack Mount 4 Ch. 400MHZ Delay Sweep. Cursors etc	£400
2467	4 Ch. 350MHZ Delay Sweep. Cursors etc	£400
TAS 465	Dual Trace 100MHZ Delay. Cursors	£195
TAS 485	4 Ch. 200MHZ Delay. Cursors	£275

HP		
54501A	Digitising 2+2 Ch 100MHZ 10 MS/S	£150
54502A	Digitising 2 Ch. 400MHZ 400 MS/S	£250
54600A	Dual Trace 100MHZ 20 MS/S	£195
54600B	Dual Trace 100MHZ 20 MS/S	£225

PHILLIPS		
PM3052	Rack Mount Dual Trace 60MHZ	£75
PM3055	2+1 Ch. 60MHZ dual TB/Delay. Autoset	£95
PM3065	2+1 Ch. 100MHZ dual TB/Delay. Autoset	£125
PM3084	4 Ch. 100MHZ Delay TB	£140
PM3335	Digital Storage Dual Trace 60MHZ 20 MS/S	£125
PM3337	Rack Mount Digital Storage Dual Trace 60MHZ 20 MS/S	£125
PM3365A	Digital Storage Dual Trace 100MHZ 100 MS/S	£150

HITACHI		
V222	Dual Trace 20MHZ DC Offset, Alt. Mag	£50
V522	Dual Trace 50MHZ DC Offset, Alt Mag	£65
V665	Dual Trace 60MHZ Delay Sweep. Cursors etc	£75
V1065	Dual Trace 100MHZ Delay Sweep. Cursors etc	£85
V1065A	Dual Trace 100MHZ Delay Sweep. Cursors etc	£95
V1150	4 Ch. 150MHZ Delay Sweep. Cursors. DVM etc	£125

HAMAG		
203.4	Dual Trace 20MHZ Component Tester	£75
203.6	Dual Trace 20MHZ Component Tester	£85
305	Dual Trace 03MHZ Analogue/Digital 40 MS/S per Channel Component Tester	£140
604.2	Dual Trace 60MHZ Component Tester	£125

STEWART of READING
17A King Street, Mortimer, Near
Reading RG7 3RS
Telephone: (0118) 933 1111
Fax: (0118) 933 2375
www.stewart-of-reading.co.uk
9am-5.00pm Monday to Friday

See our website for 1,000's of items currently in stock

Used Equipment – GUARANTEED.
Most Manuals supplied
Please check availability before ordering or calling.
Prices plus carriage and VAT

Associate Professor **Dr Murat Uzam** from Nigde University in Turkey presents a series of articles on a project that focuses on a microcontroller-based PLC. This is the fourth article of the series describing the flip-flop based macros

PLC with PIC16F648A Micro

IN THIS ARTICLE, the following flip-flop based macros are described: r_edge (rising edge detector), f_edge (falling edge detector), latch0, latch1, dff_r (rising edge triggered D flip-flop), dff_f (falling edge triggered D flip-flop), tff_r (rising edge triggered T flip-flop), tff_f (falling edge triggered T flip-flop), jkff_r (rising edge triggered JK flip-flop), jkff_f (falling edge triggered JK flip-flop).

Each macro defined here requires an edge detection mechanism, except for latch0 and latch1. The following 8-bit variables are used for this purpose: RED – Rising Edge Detector, FED – Falling Edge Detector, DFF_RED – Rising Edge Detector for D flip-flop, DFF_FED – Falling Edge Detector for D flip-flop, TFF_RED – Rising Edge Detector for T flip-flop, TFF_FED – Falling Edge Detector for T flip-flop, JKFF_RED – Rising Edge Detector for JK flip-flop, JKFF_FED – Falling Edge Detector for JK flip-flop.

They are declared within the RAM data memory as shown in **Figure 1**. Each 8-bit variable enables us to declare and use 8 different functions defined by the related macro. The macros latch0 and latch1 are exception for this, which means that we can use as many latches of latch0 or latch1 as we wish. The file "ff_mcr_def.inc" (all the files considered in this article including "ff_mcr_def.inc" can be downloaded from (**http://host.nigde.edu.tr/muzam/**) contains all flip-flop based macros defined for UZAM_PLC.

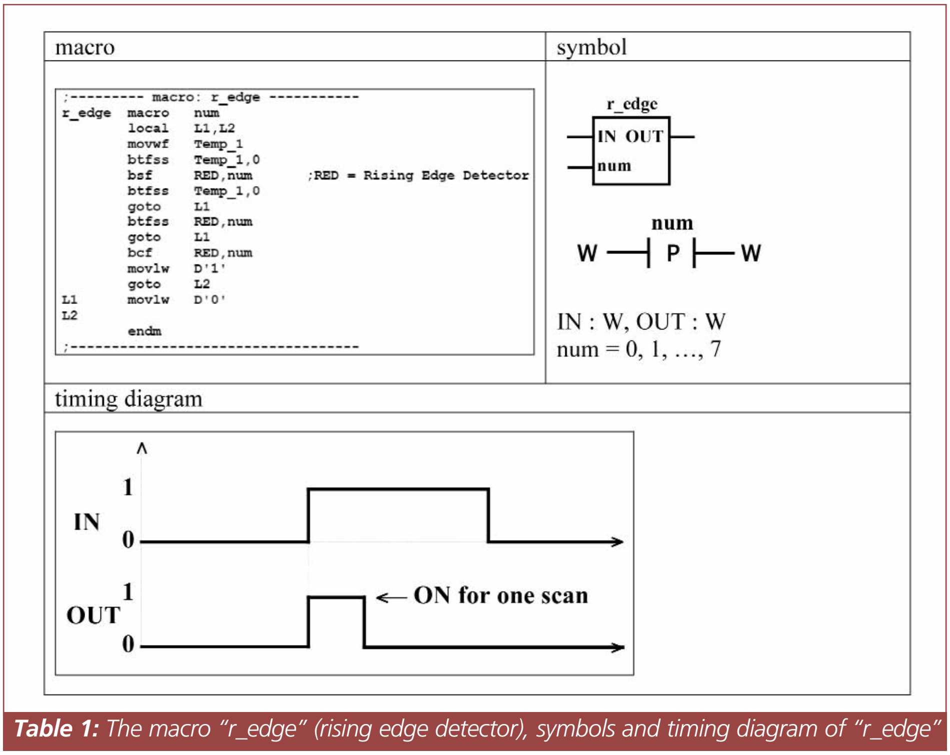

```
;--------- macro: r_edge -----------
r_edge  macro   num
        local   L1,L2
        movwf   Temp_1
        btfss   Temp_1,0
        bsf     RED,num         ;RED = Rising Edge Detector
        btfss   Temp_1,0
        goto    L1
        btfss   RED,num
        goto    L1
        bcf     RED,num
        movlw   D'1'
        goto    L2
L1      movlw   D'0'
L2
        endm
;----------------------------------
```

***Table 1:** The macro "r_edge" (rising edge detector), symbols and timing diagram of "r_edge"*

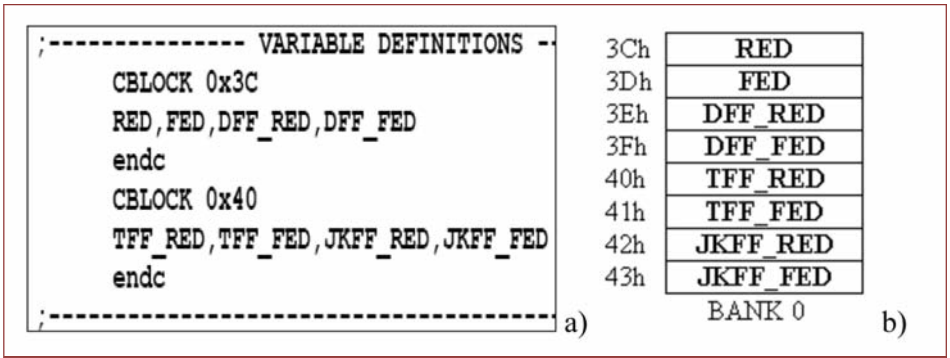

```
;--------------- VARIABLE DEFINITIONS -
      CBLOCK 0x3C
      RED,FED,DFF_RED,DFF_FED
      endc
      CBLOCK 0x40
      TFF_RED,TFF_FED,JKFF_RED,JKFF_FED
      endc
;-------------------------------------
```

3Ch	RED
3Dh	FED
3Eh	DFF_RED
3Fh	DFF_FED
40h	TFF_RED
41h	TFF_FED
42h	JKFF_RED
43h	JKFF_FED

***Figure 1: (a)** The definition of 8-bit variables to be used for the flip-flop based macros **(b)** Their allocation in BANK 0 of RAM data memory*

Macro "r_edge" (Rising Edge Detector)

The macro "r_edge" defines eight rising edge detector functions (or contacts), selected with the num = 0, 1…7. It has a Boolean input variable, namely IN, passed into the macro through "W" and a Boolean output variable, namely OUT, passed out through "W". This means that the input signal IN should be loaded into W before this macro is run, and the output signal OUT will be provided within

controller – Part 4

macro

```
;--------- macro: f_edge -----------
f_edge  macro   num
        local   L1,L2
        movwf   Temp_1
        btfsc   Temp_1,0
        bsf     FED,num       ;FED = Falling Edge Detector
        btfsc   Temp_1,0
        goto    L1
        btfss   FED,num
        goto    L1
        bcf     FED,num
        movlw   D'1'
        goto    L2
L1      movlw   D'0'
L2
        endm
;-----------------------------------
```

symbol

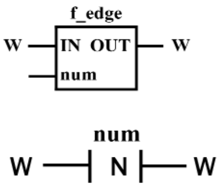

IN : W, OUT : W
num = 0, 1, …, 7

timing diagram

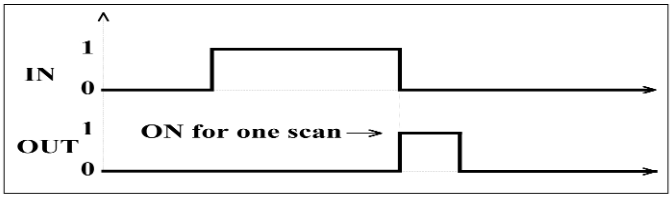

Table 2: *The macro "f_edge" (falling edge detector), and the symbols and timing diagram of "f_edge"*

macro

```
;--------- macro: latch1 ----------
latch1  macro   regi,biti,rego,bito
        local   L1,L2
        andlw   1
        btfsc   STATUS,Z
        goto    L1
        btfss   regi,biti
        goto    L2
        bsf     rego,bito
        goto    L1
L2      bcf     rego,bito
L1
        endm
;-----------------------------------
```

symbol

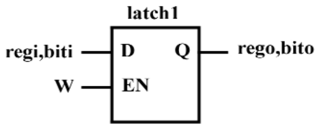

EN : W,
D : regi,biti
Q : rego,bito

truth table

EN	D	Q_t	Q_{t+1}	Comment
0	×	Q_t	Q_t	No change
1	0	×	0	Reset
1	1	×	1	Set

× : don't care.

Table 3: *The macro "latch1" (D latch with active high enable), and the symbol and truth table of "latch1"*

the W at the end of the macro. **Table 1** shows the macro "r_edge", its symbols and timing diagram.

In ladder logic, this macro is represented by a normally open (NO) contact with the identifier "P", meaning positive transition-sensing contact. As can be seen from the timing diagram the OUT is ON (1) for only one scan time when the IN changes state from OFF (0) to ON (1). In the other instances the OUT remains OFF (0).

Macro "f_edge" (Falling Edge Detector)

The macro "f_edge" defines eight falling edge detector functions (or contacts) selected with the num = 0, 1…7. It has a Boolean input variable, namely IN, passed into the macro through "W" and a Boolean output variable, namely OUT, passed out through "W". This means that the input signal IN should be loaded into W before this macro is run and the output signal OUT will be provided within the W at the end of the macro. **Table 2** shows the macro "f_edge", its symbols and timing diagram.

In ladder logic, this macro is represented by a normally open (NO) contact with the identifier "N", meaning negative transition-sensing contact. As can be seen from the timing diagram the OUT is ON (1) for only one scan time when the IN changes state from ON (1) to OFF (0). In the other instances the OUT remains OFF (0).

Macro "latch1" (D Latch with Active High Enable)

The macro "latch1" defines a D latch function with active high enable. Unlike the edge triggered flip-flops and the edge

```
;--------- macro: latch0 ----------
latch0  macro   regi,biti,rego,bito
        local   L1,L2
        andlw   1
        btfss   STATUS,Z
        goto    L1
        btfss   regi,biti
        goto    L2
        bsf     rego,bito
        goto    L1
L2      bcf     rego,bito
L1
        endm
;-----------------------------------
```

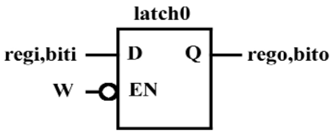

EN : W,
D : regi,biti
Q : rego,bito

truth table

EN	D	Q_t	Q_{t+1}	Comment
1	×	Q_t	Q_t	No change
0	0	×	0	Reset
0	1	×	1	Set

× : don't care.

Table 4: *The macro "latch0" (D latch with active low enable), and the symbol and truth table of "latch0"*

macro

```
;--------- macro: dff_r ------------
dff_r   macro   num, regi,biti,rego,bito
        local   L1,L2
        movwf   Temp_1
        btfss   Temp_1,0
        bsf     DFF_RED,num   ;DFF_RED = Rising Edge Detector
        btfss   Temp_1,0      ;for rising edge triggered
        goto    L1            ;D flip-flop
        btfss   DFF_RED,num
        goto    L1
        bcf     DFF_RED,num
        btfss   regi,biti
        goto    L2
        bsf     rego,bito
        goto    L1
L2      bcf     rego,bito
L1
        endm
;-----------------------------------
```

symbol

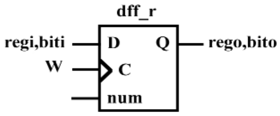

C : W,
D : regi,biti
Q : rego,bito
num = 0, 1, …, 7

truth table

D	C	Q_t	Q_{t+1}	Comment
×	0	Q_t	Q_t	No change
×	1	Q_t	Q_t	No change
×	↓	Q_t	Q_t	No change
0	↑	×	0	Reset
1	↑	×	1	Set

× : don't care.

Table 5: *The macro "dff_r" (rising edge triggered D flip-flop), and the symbol and truth table of "dff_r"*

detector macros, in which eight functions are described, this function defines only one D latch function. However, we are free to use this macro as many times as we need, with different input/output variables.

The macro "latch1" has two Boolean input variables, namely EN: passed into the macro through "W" and D: regi,biti; and a single Boolean output variable, Q: rego,bito. The input signal EN (active high enable input) should be loaded into W before this macro is run.

Table 3 shows the macro "latch1", together with its symbol and truth table. When the active high enable input EN is OFF (0), no state change is issued for the output Q and it holds its current state. When the active high enable input EN is ON (1), the output Q is loaded with the state of the input D.

Macro "latch0" (D Latch with Active Low Enable)

The macro "latch0" defines a D latch function with active low enable. Unlike the edge triggered flip-flops and the edge detector macros, in which eight functions are described, this function defines only one D latch function. However, we are free to use this macro as many times as needed, with different input/output variables.

The macro "latch0" has two Boolean input variables, namely EN: passed into the macro through "W" and D: regi,biti; and a single Boolean output variable, Q: rego,bito.

The input signal EN (active low enable input) should be loaded into W before this macro is run. **Table 4** shows the macro "latch0", together with its symbol and truth table. When the active low enable input EN is ON (1), no state change is issued for the output Q and it holds its current state. When the active low enable input EN is OFF (0), the output Q is loaded with the state of the input D.

Macro "dff_r" (Rising Edge Triggered D Flip-Flop)

The macro "dff_r" defines eight rising edge triggered D flip-flop functions, selected with the num = 0, 1…7. It has two Boolean input variables, namely clock input C: passed into the macro through "W" and data input D: regi,biti; and a single Boolean output variable, flip-flop output Q: rego,bito.

The clock input signal C should be loaded into W before this macro is run. **Table 5** shows the macro "dff_r", together with its symbol and truth table. When the clock input signal C is ON (1), or OFF (0), or changes state from ON to OFF (↓), no state change is issued for the output Q and it holds its current state. When the state of clock input signal C is changed from OFF to ON (↑), the output Q is loaded with the state of the input D.

Macro "dff_f" (Falling Edge Triggered D Flip-Flop)

The macro "dff_f" defines eight falling edge triggered D flip-flop functions selected with the num = 0, 1…7. It has two Boolean input variables, namely clock input C: passed into the macro through "W" and data input D: regi,biti; and a single Boolean output variable, flip-flop output Q: rego,bito.

The clock input signal C should be loaded into W before this macro is run. **Table 6** shows the macro "dff_f", macro

```
;--------- macro: dff_f ------------
dff_f   macro   num,regi,biti,rego,bito
        local   L1,L2
        movwf   Temp_1
        btfsc   Temp_1,0
        bsf     DFF_FED,num  ;DFF_FED = Falling Edge Detector
        btfsc   Temp_1,0      ;for falling edge triggered
        goto    L1            ;D flip-flop
        btfss   DFF_FED,num
        goto    L1
        bcf     DFF_FED,num
        btfss   regi,biti
        goto    L2
        bsf     rego,bito
        goto    L1
L2      bcf     rego,bito
L1
        endm
;-----------------------------------
```

symbol

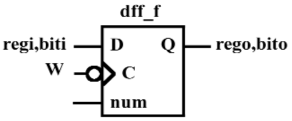

C : W,
D : regi,biti
Q : rego,bito
num = 0, 1, …, 7

truth table

D	C	Q_t	Q_{t+1}	Comment
×	0	Q_t	Q_t	No change
×	1	Q_t	Q_t	No change
×	↑	Q_t	Q_t	No change
0	↓	×	0	Reset
1	↓	×	1	Set

× : don't care.

***Table 6:** The macro "dff_f" (falling edge triggered D flip-flop), and its symbol and truth table of "dff_f"*

macro

```
;--------- macro: tff_r ------------
tff_r   macro   num,regi,biti,rego,bito
        local   L1,L2
        movwf   Temp_1
        btfss   Temp_1,0
        bsf     TFF_RED,num ;TFF_RED = Rising Edge Detector
        btfss   Temp_1,0     ;for rising edge triggered
        goto    L1           ;T flip-flop
        btfss   TFF_RED,num
        goto    L1
        bcf     TFF_RED,num
        movlw   0
        btfsc   regi,biti
        movlw   1
        movwf   Temp_1
        movlw   0
        btfsc   rego,bito
        movlw   1
        xorwf   Temp_1,f
        btfss   Temp_1,0
        goto    L2
        bsf     rego,bito
        goto    L1
L2      bcf     rego,bito
L1
        endm
;-----------------------------------
```

symbol

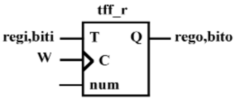

C : W,
T : regi,biti
Q : rego,bito
num = 0, 1, …, 7

truth table

T	C	Q_t	Q_{t+1}	Comment
×	0	Q_t	Q_t	No change
×	1	Q_t	Q_t	No change
×	↓	Q_t	Q_t	No change
0	↑	Q_t	Q_t	No change
1	↑	Q_t	$\overline{Q_t}$	Toggle

× : don't care.

***Table 7:** The macro "tff_r"(rising edge triggered T flip-flop), and the symbol and truth table of "tff_r"*

together with its symbol and truth table.

When the clock input signal C is ON (1), or OFF (0), or changes state from ON to OFF (↑), no state change is issued for the output Q and it holds its current state. When the state of clock input signal C is changed from ON to OFF (↓), the output Q is loaded with the state of the input D.

Macro "tff_r" (Rising Edge Triggered T Flip-Flop)

The macro "tff_r" defines eight rising edge triggered T flip-flop functions, selected with the num = 0, 1…7. It has two Boolean input variables, namely clock input C: passed into the macro through "W" and toggle input T: regi,biti; and a single Boolean output variable, flip-flop output Q: rego,bito. The clock input signal C should be loaded into W before this macro is run.

Table 7 shows the macro "tff_r", together with its symbol and truth table. When the clock input signal C is ON (1), or OFF (0), or changes state from ON to OFF (↓), no state change is issued for the output Q and it holds its current state. When the state of clock input signal C is changed from OFF to ON (↑), if T = 0, then no state change is issued for the output Q and it holds its current state. When the state of clock input signal C is changed from OFF to ON (↑), if T = 1, then the output Q is toggled.

Macro "tff_f" (Falling Edge Triggered T Flip-Flop)

The macro "tff_f" defines eight falling edge triggered T flip-flop functions selected with the num = 0, 1…7. It has two Boolean input variables, namely clock input C: passed into the macro through "W" and toggle input T: regi,biti; and a single Boolean output variable, flip-flop output Q: rego,bito. The clock input signal C should be loaded into W before this macro is run. **Table 8** shows the macro "tff_f", together with its symbol and truth table.

When the clock input signal C is ON (1), or OFF (0), or changes state from OFF to ON (↑), no state change is issued for the output Q and it holds its current state. When the state of clock input signal C is changed from ON to OFF (↓) then if T = 0 no state change is issued for the output Q; if T = 1, then the output Q is toggled.

Macro "jkff_r" (Rising Edge Triggered JK Flip-Flop)

The macro "jkff_r" defines eight rising edge triggered JK flip-flop functions, selected with the num = 0, 1…7. It has three Boolean input variables, namely clock input C: passed into the macro through "W", data inputs J: regj,bitj and K: regk,bitk; and a single Boolean output

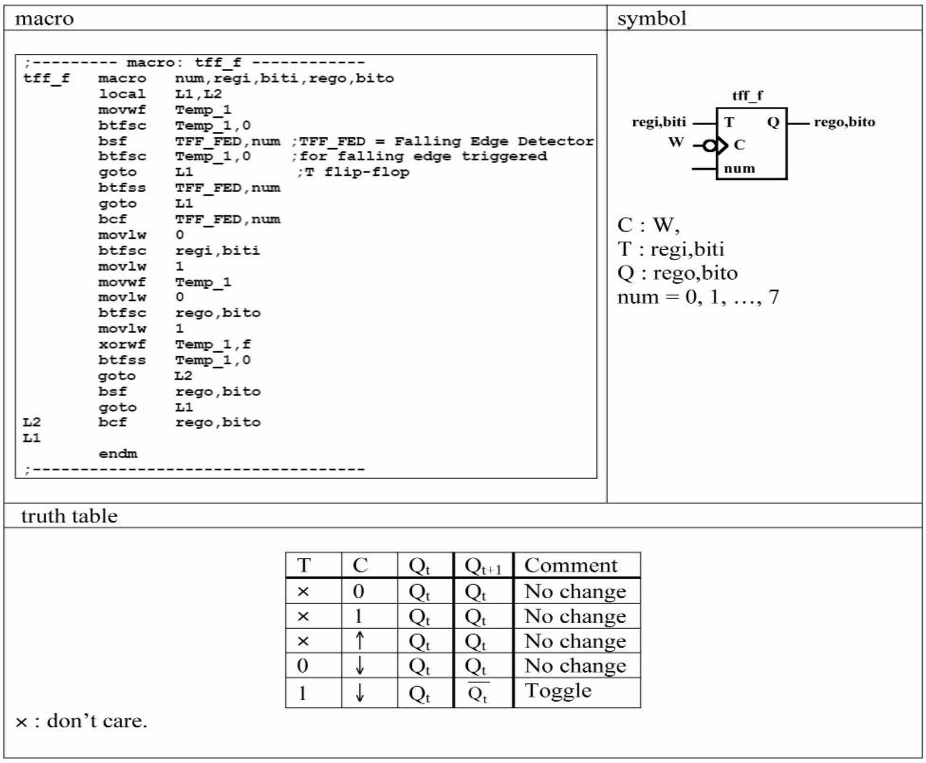

macro

```
;--------- macro: tff_f ------------
tff_f    macro    num,regi,biti,rego,bito
         local    L1,L2
         movwf    Temp_1
         btfsc    Temp_1,0
         bsf      TFF_FED,num ;TFF_FED = Falling Edge Detector
         btfsc    Temp_1,0    ;for falling edge triggered
         goto     L1           ;T flip-flop
         btfss    TFF_FED,num
         goto     L1
         bcf      TFF_FED,num
         movlw    0
         btfsc    regi,biti
         movlw    1
         movwf    Temp_1
         movlw    0
         btfsc    rego,bito
         movlw    1
         xorwf    Temp_1,f
         btfss    Temp_1,0
         goto     L2
         bsf      rego,bito
         goto     L1
L2       bcf      rego,bito
L1
         endm
;-----------------------------------
```

symbol

C : W,
T : regi,biti
Q : rego,bito
num = 0, 1, …, 7

truth table

T	C	Q_t	Q_{t+1}	Comment
×	0	Q_t	Q_t	No change
×	1	Q_t	Q_t	No change
×	↑	Q_t	Q_t	No change
0	↓	Q_t	Q_t	No change
1	↓	Q_t	$\overline{Q_t}$	Toggle

× : don't care.

***Table 8:** The macro "tff_f" (falling edge triggered T flip-flop), and the symbol and truth table of "tff_f"*

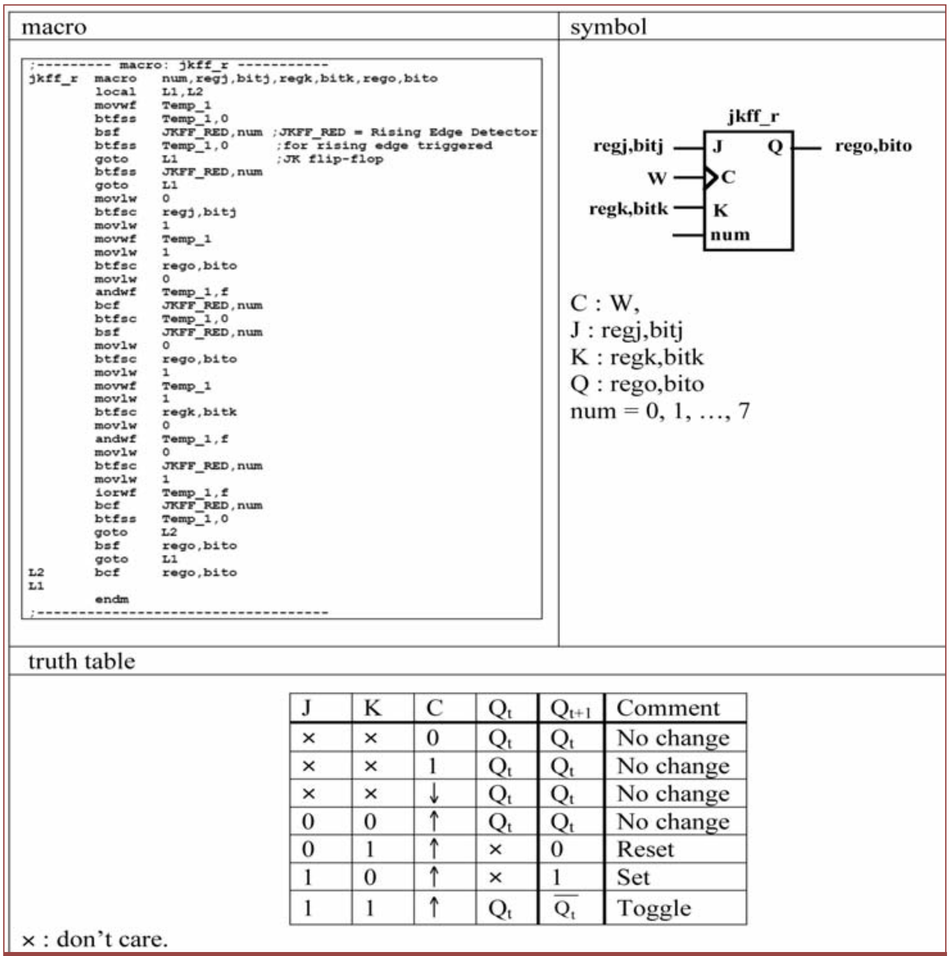

macro

```
;--------- macro: jkff_r -----------
jkff_r   macro    num,regj,bitj,regk,bitk,rego,bito
         local    L1,L2
         movwf    Temp_1
         btfss    Temp_1,0
         bsf      JKFF_RED,num ;JKFF_RED = Rising Edge Detector
         btfss    Temp_1,0      ;for rising edge triggered
         goto     L1            ;JK flip-flop
         btfss    JKFF_RED,num
         goto     L1
         movlw    0
         btfsc    regj,bitj
         movlw    1
         movwf    Temp_1
         movlw    1
         btfsc    rego,bito
         movlw    0
         andwf    Temp_1,f
         bcf      JKFF_RED,num
         btfsc    Temp_1,0
         bsf      JKFF_RED,num
         movlw    0
         btfsc    rego,bito
         movlw    1
         movwf    Temp_1
         movlw    1
         btfsc    regk,bitk
         movlw    0
         andwf    Temp_1,f
         movlw    0
         btfsc    JKFF_RED,num
         movlw    1
         iorwf    Temp_1,f
         bcf      JKFF_RED,num
         btfss    Temp_1,0
         goto     L2
         bsf      rego,bito
         goto     L1
L2       bcf      rego,bito
L1
         endm
;-----------------------------------
```

symbol

C : W,
J : regj,bitj
K : regk,bitk
Q : rego,bito
num = 0, 1, …, 7

truth table

J	K	C	Q_t	Q_{t+1}	Comment
×	×	0	Q_t	Q_t	No change
×	×	1	Q_t	Q_t	No change
×	×	↓	Q_t	Q_t	No change
0	0	↑	Q_t	Q_t	No change
0	1	↑	×	0	Reset
1	0	↑	×	1	Set
1	1	↑	Q_t	$\overline{Q_t}$	Toggle

× : don't care.

***Table 9:** The macro "jkff_r" (rising edge triggered JK flip-flop), and the symbol and truth table of "jkff_r"*

variable, flip-flop output Q: rego,bito. The clock input signal C should be loaded into W before this macro is run. **Table 9** shows the macro "jkff_r", together with its symbol and truth table.

When the clock input signal C is ON (1), or OFF (0), or changes state from ON to OFF (↓), no state change is issued for the output Q and it holds its current state. When the state of clock input signal C is changed from OFF to ON (↑): if JK = 00, then no state change is issued; if JK = 01, then Q is reset; if JK = 10, then Q is set; and finally if JK = 11, then Q is toggled.

Macro "jkff_f" (Falling Edge Triggered JK Flip-Flop)

The macro "jkff_f" defines eight falling edge triggered JK flip-flop functions, selected with the num = 0, 1…7. It has three Boolean input variables, namely clock input C: passed into the macro through "W", data inputs J: regj,bitj and K: regk,bitk; and a single Boolean output variable, flip-flop output Q: rego,bito. The clock input signal C should be loaded into W before this macro is run. **Table 10** shows the macro "jkff_f", together with its symbol and truth table.

When the clock input signal C is ON (1), or OFF (0), or changes state from OFF to ON (↑), no state change is issued for the output Q and it holds its current state. When the state of clock input signal C is changed from ON to OFF (↓): if JK = 00, then no state change is issued; if JK = 01, then Q is reset; if JK = 10, then Q is set; and finally if JK = 11, then Q is toggled.

Flip-Flop Based Macro Examples

In this section we will consider four examples, namely UZAM_plc_8i8o_exN.asm, N = 7, 8, 9, 10, to show the usage of flip-flop based macros. In order to test these examples, you can download the files from **http://host.nigde.edu.tr/muzam/**. The program UZAM_plc_8i8o_exN.asm, N = 7, 8, 9, 10, by MPLAB IDE will need to be compiled. After that, with the PIC programming software, take the compiled file "UZAM_PLC_8i8o_exN.hex" and send it to the program memory of PIC16F648A microcontroller within the UZAM_PLC, by using your own PIC programming hardware. After loading the

"UZAM_PLC_8i8o_exN.hex", switch the 4PDT in "RUN" and the power "ON". Finally, you are ready to test the example programs. To check the correctness of each program you are referred to the related information for each of the function discussed here.

The first example program, "UZAM_plc_8i8o_ex7.asm" is shown in **Figure 2**. It shows the usage of the following flip-flop based macros: r_edge, f_edge, latch1, latch0. The schematic and ladder diagrams of this program are depicted in **Figures 3a** and in **3b**. Note that it is not possible to observe the effects of r_edge and f_edge shown in rungs 1 and 2 due to the time delays caused by the macro HC595, as explained in Part 2 of this article series, which run in the last issue of Electronics World.

On the other hand you can observe their effects from the rungs 5 and 6 respectively, where r_edge and f_edge are both used together with the macro latch1. Observe that in rung 5 we obtain a rising edge triggered D flip-flop by using a r_edge and a latch1. Similarly, in rung 6 we obtain a falling edge triggered D flip-flop by using a f_edge and a latch1.

The second example program, "UZAM_plc_8i8o_ex8.asm", is shown in **Figure 4**. It shows the usage of the following flip-flop based macros: dff_r, dff_f. The schematic and ladder diagrams of this program are shown in **Figures 5a** and in **5b**. Note that in this example, _set and _reset functions are both used as asynchronous SET and RESET inputs for the D type flip-flops.

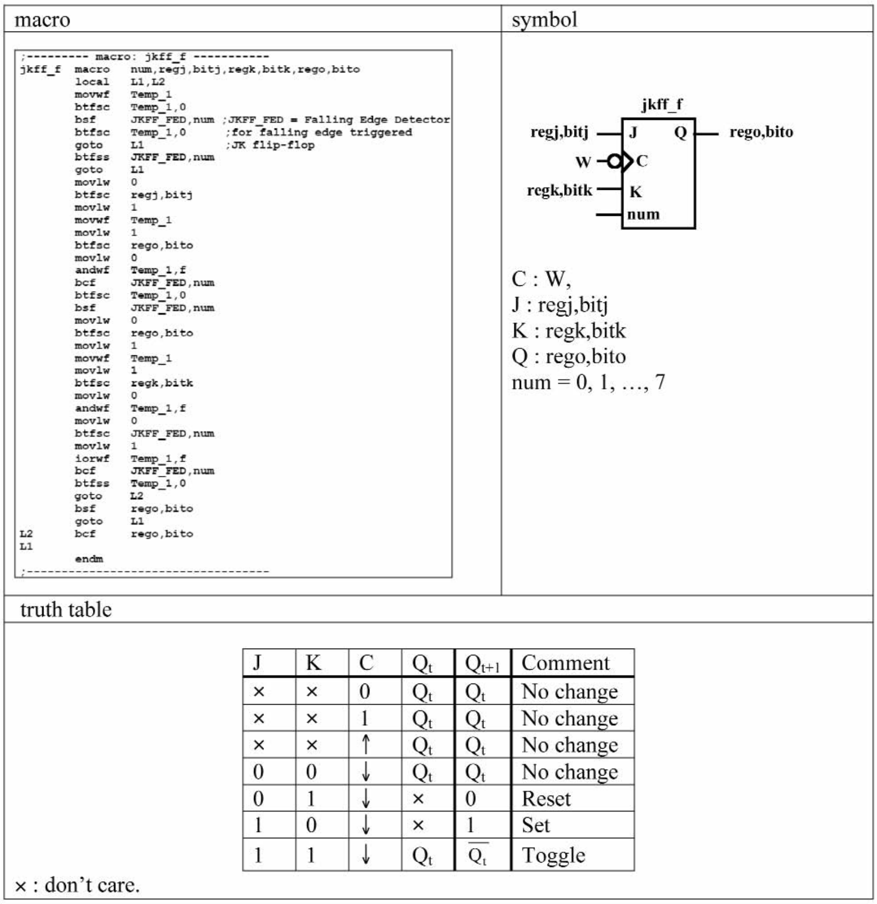

macro

```
;--------- macro: jkff_f -----------
jkff_f  macro   num,regj,bitj,regk,bitk,rego,bito
        local   L1,L2
        movwf   Temp_1
        btfsc   Temp_1,0
        bsf     JKFF_FED,num ;JKFF_FED = Falling Edge Detector
        btfsc   Temp_1,0      ;for falling edge triggered
        goto    L1            ;JK flip-flop
        btfss   JKFF_FED,num
        goto    L1
        movlw   0
        btfsc   regj,bitj
        movlw   1
        movwf   Temp_1
        movlw   1
        btfsc   rego,bito
        movlw   0
        andwf   Temp_1,f
        bcf     JKFF_FED,num
        btfsc   Temp_1,0
        bsf     JKFF_FED,num
        movlw   0
        btfsc   rego,bito
        movlw   1
        movwf   Temp_1
        movlw   1
        btfsc   regk,bitk
        movlw   0
        andwf   Temp_1,f
        movlw   0
        btfsc   JKFF_FED,num
        movlw   1
        iorwf   Temp_1,f
        bcf     JKFF_FED,num
        btfss   Temp_1,0
        goto    L2
        bsf     rego,bito
        goto    L1
L2      bcf     rego,bito
L1
        endm
;-----------------------------------
```

symbol

C : W,
J : regj,bitj
K : regk,bitk
Q : rego,bito
num = 0, 1, …, 7

truth table

J	K	C	Q_t	Q_{t+1}	Comment
×	×	0	Q_t	Q_t	No change
×	×	1	Q_t	Q_t	No change
×	×	↑	Q_t	Q_t	No change
0	0	↓	Q_t	Q_t	No change
0	1	↓	×	0	Reset
1	0	↓	×	1	Set
1	1	↓	Q_t	$\overline{Q_t}$	Toggle

× : don't care.

***Table 10:** The macro "jkff_f" (falling edge triggered JK flip-flop), and the symbol and truth table of "jkff_f"*

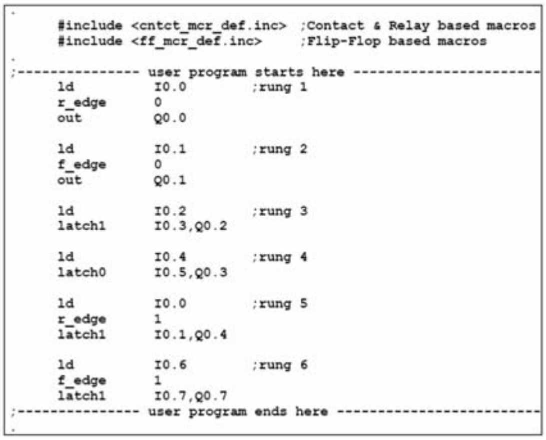

```
.
      #include <cntct_mcr_def.inc>  ;Contact & Relay based macros
      #include <ff_mcr_def.inc>     ;Flip-Flop based macros
.
;--------------- user program starts here -----------------------
      ld          I0.0          ;rung 1
      r_edge      0
      out         Q0.0

      ld          I0.1          ;rung 2
      f_edge      0
      out         Q0.1

      ld          I0.2          ;rung 3
      latch1      I0.3,Q0.2

      ld          I0.4          ;rung 4
      latch0      I0.5,Q0.3

      ld          I0.0          ;rung 5
      r_edge      1
      latch1      I0.1,Q0.4

      ld          I0.6          ;rung 6
      f_edge      1
      latch1      I0.7,Q0.7
;--------------- user program ends here -------------------------
.
```

***Figure 2:** The user program of UZAM_plc_8i8o_ex7.asm*

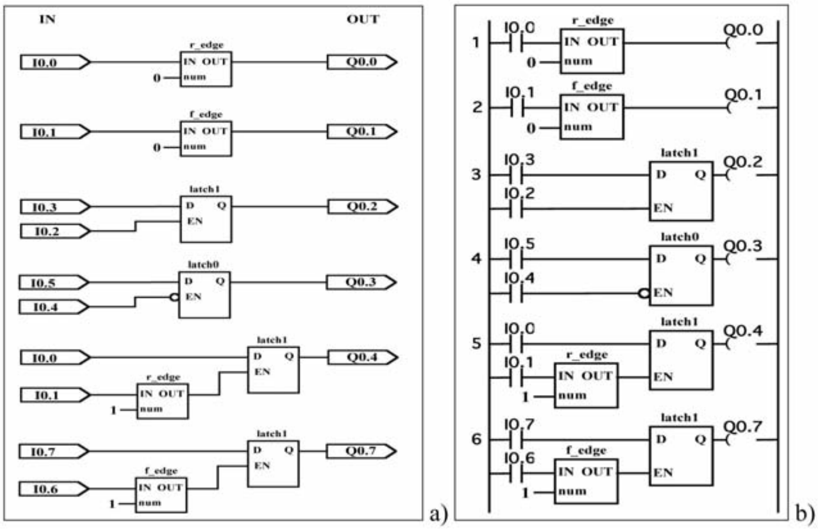

***Figure 3:** **(a)** Schematic diagram and **(b)** Ladder diagram for the user program of UZAM_plc_8i8o_ex7.asm*

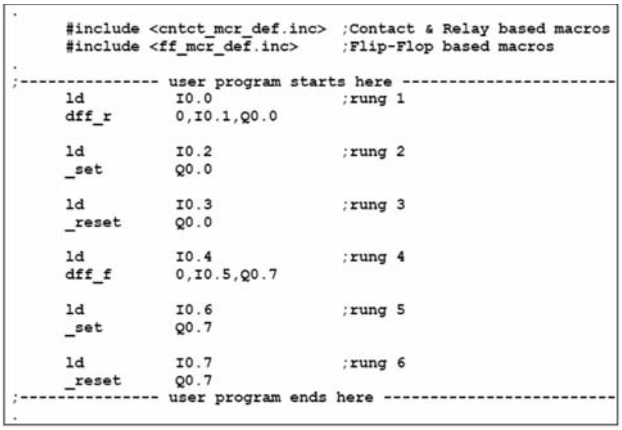

```
.
        #include <cntct_mcr_def.inc>  ;Contact & Relay based macros
        #include <ff_mcr_def.inc>     ;Flip-Flop based macros
.
;--------------- user program starts here -----------------------
        ld          I0.0               ;rung 1
        dff_r       0,I0.1,Q0.0

        ld          I0.2               ;rung 2
        _set        Q0.0

        ld          I0.3               ;rung 3
        _reset      Q0.0

        ld          I0.4               ;rung 4
        dff_f       0,I0.5,Q0.7

        ld          I0.6               ;rung 5
        _set        Q0.7

        ld          I0.7               ;rung 6
        _reset      Q0.7
;--------------- user program ends here --------------------------
.
```

Figure 4: *The user program of UZAM_plc_8i8o_ex8.asm*

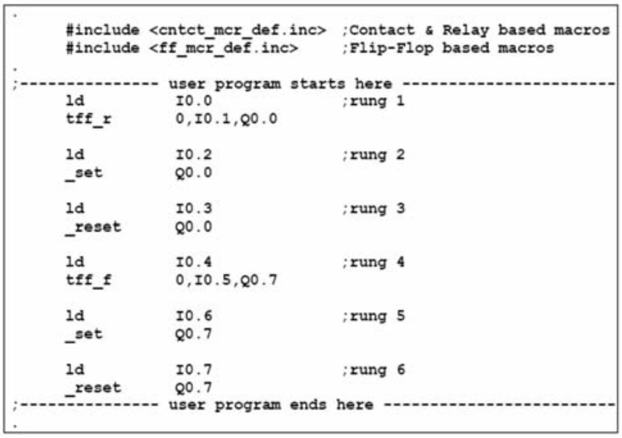

```
.
        #include <cntct_mcr_def.inc>  ;Contact & Relay based macros
        #include <ff_mcr_def.inc>     ;Flip-Flop based macros
.
;--------------- user program starts here -----------------------
        ld          I0.0               ;rung 1
        tff_r       0,I0.1,Q0.0

        ld          I0.2               ;rung 2
        _set        Q0.0

        ld          I0.3               ;rung 3
        _reset      Q0.0

        ld          I0.4               ;rung 4
        tff_f       0,I0.5,Q0.7

        ld          I0.6               ;rung 5
        _set        Q0.7

        ld          I0.7               ;rung 6
        _reset      Q0.7
;--------------- user program ends here --------------------------
.
```

Figure 6: *The user program of UZAM_plc_8i8o_ex9.asm*

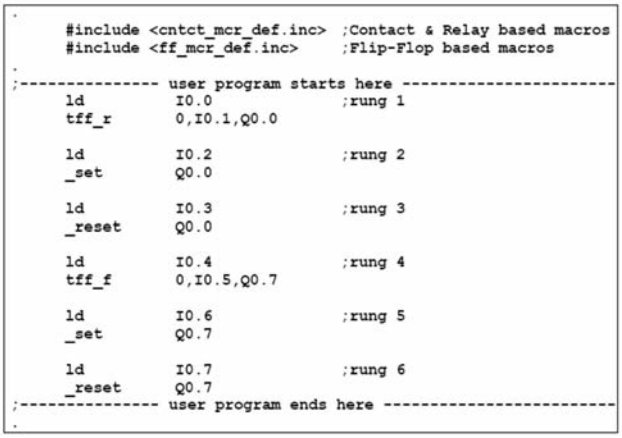

```
.
        #include <cntct_mcr_def.inc>  ;Contact & Relay based macros
        #include <ff_mcr_def.inc>     ;Flip-Flop based macros
.
;--------------- user program starts here -----------------------
        ld          I0.0               ;rung 1
        tff_r       0,I0.1,Q0.0

        ld          I0.2               ;rung 2
        _set        Q0.0

        ld          I0.3               ;rung 3
        _reset      Q0.0

        ld          I0.4               ;rung 4
        tff_f       0,I0.5,Q0.7

        ld          I0.6               ;rung 5
        _set        Q0.7

        ld          I0.7               ;rung 6
        _reset      Q0.7
;--------------- user program ends here --------------------------
.
```

Figure 8: *The user program of UZAM_plc_8i8o_ex10.asm*

The third example program, "UZAM_plc_ 8i8o_ex9.asm" is shown in **Figure 6**. It shows the usage of the following flip-flop based macros: tff_r, tff_f. The schematic and ladder diagrams of this program are depicted in **Figures 7a** and in **7b**. Note that in this example, _set and _reset functions are both used as asynchronous SET and RESET inputs for the T type flip-flops.

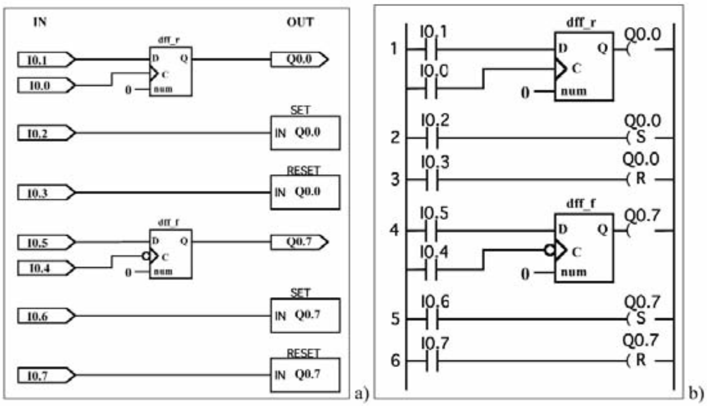

Figure 5: (a) *Schematic diagram and* ***(b)*** *Ladder diagram for the user program of UZAM_plc_8i8o_ex8.asm*

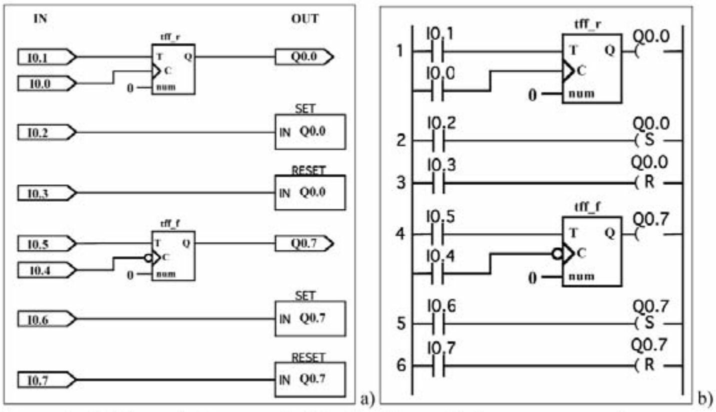

Figure 7: (a) *Schematic diagram and* ***(b)*** *Ladder diagram for the user program of UZAM_plc_8i8o_ex9.asm*

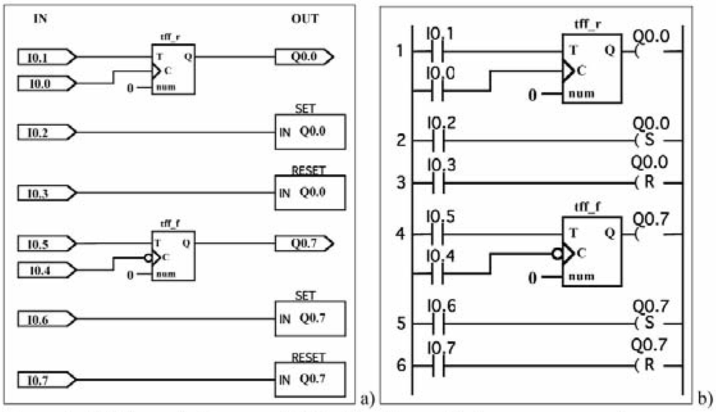

Figure 9: (a) *Schematic diagram and* ***(b)*** *Ladder diagram for the user program of UZAM_plc_8i8o_ex10.asm*

The forth example program, "UZAM_plc_8i8o_ex10.asm" is shown in **Figure 8**. It shows the usage of the following flip-flop based macros: jkff_r, jkff_f. The schematic and ladder diagrams are shown in **Figures 9a** and in **9b**. Note that in this example, _set and _reset functions are both used as asynchronous SET and RESET inputs for the rising edge triggered JK flip-flop. ■

VERSATILE DATA ACQUISITION SYSTEM

A NEW DATA acquisition system (DAQ) named V-DAS and based on the VME bus (with Linux/Windows operating system) is presented here. The system is supported by a text-based user interface (TUI) and a graphic user interface (GUI), both allowing for an easy management of the DAQ.

V-DAS is software and hardware system written using the C language for the management of VME-based DAQ systems. The VME bus (Versa Module Europa) is a flexible open-ended bus system, based on the Eurocard standard. VME bus was intended to be a flexible environment supporting a variety of compute-intensive tasks, and is now a very popular protocol in the computer industry.

The idea that led us to the realisation of V-DAS has been the necessity of creating a new set of functions and structures that assures the easy management of VME-based DAQ systems, starting from the VME universe drivers and libraries for the VME bus and the standard C libraries.

Hardware and Software

The system architecture (see **Figure 1** and **2**) relies on a VME crate, managed by an Intel-based crate controller, running the Linux operating system (or Windows operating system).

V-DAS is composed of five subsystems, each having a specific function:

- VME bus interface: implements the communication with the boards mounted in the VME crate.
- Data writing: takes care of writing acquired data on structured data files.
- Configuration file interpreter: reads and parses the configuration file and sets up the DAQ.
- Error handler: manages errors that may show up during data taking (network problems, VME bus errors, disk access problems, etc).
- Network data transfer manager: takes care of transferring acquired data from the VME crate manager to an optional data storage host via an Ethernet connection.

V-DAS has two user interfaces: a TUI in an ASCII configuration file and a GUI available by the means of any web browser.

Both interfaces permit DAQ management and customisation without the need of recompiling the sources, thus granting full acquisition control even to inexperienced programmers.

The configuration file is written in a high-level language (meta language) and is easily modified by the operator. V-DAS takes care of reading and parsing it and modifies the DAQ setup accordingly.

The GUI works at a higher level with respect to the ASCII configuration file, and helps the operator in compiling the configuration file and in controlling the acquisition. The use of the web interface does not require any knowledge of the configuration file syntax and avoids "grammatical" errors. It is up to the operator to choose the TUI or the GUI when modifying the DAQ setup.

The web interface has been realised by means of the HTML and PHP programming languages. It requires running a web server authorised to modify the V-DAS configuration file. Its main goals are the compilation of the configuration file and the management of the DAQ.

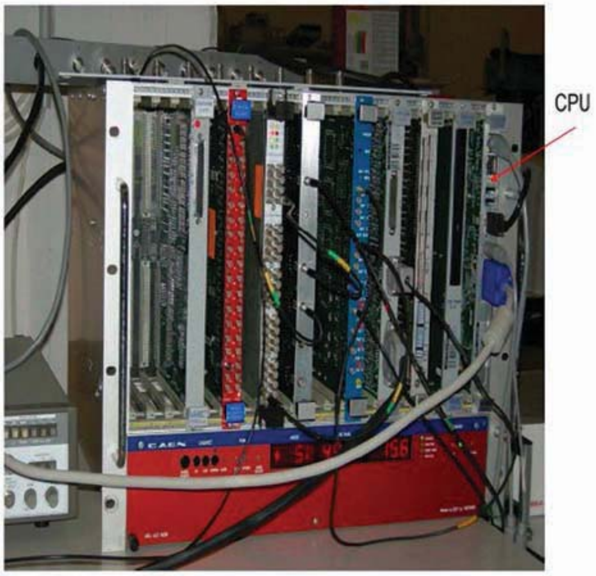

Figure 1

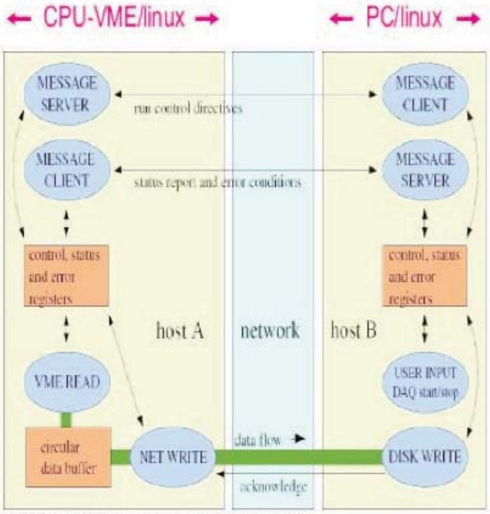

VME READ: init VME bus; read data from VME; write data to buffer.
NET WRITE: read data from buffer; write data to network.
DISK WRITE: read data from network; write data to disk.

Figure 2

DAQ control (start, stop) can be performed via the web interface. The home page gives access to where the "Start" and "Stop" buttons can be used for DAQ control and the running configuration may be browsed through.

Maurizio Di Paolo Emilio
Italy

TIP 1: GENERATING AUXILIARY VOLTAGES USING EXTERNAL CHARGE PUMPS

By Nicolas Guibourg, Systems Engineer, Texas Instruments, Germany

External charge pumps are an easy and flexible way of generating auxiliary power rails from a step-up converter. These rails can theoretically be any voltage, positive or negative, and can supply any application requiring two or more voltages.

All three main voltages (+27V/–7V and 15V) necessary for TFT-LCD applications can be supplied from a single step-up converter with a unique 5V input power line for instance. Or from a 3.3V power supply can be generated from the ±5V supply voltages required by an operational amplifier.

This design idea explains how to generate two extra voltages by using external charge pumps, from a single-channel step-up converter like the TPS61087 from Texas Instruments. The examples here will give readers an understanding of charge pumps, giving them the ability to generate the proper voltage rails needed by the system with a cost-effective solution.

Figure 1 shows an external positive charge pump configuration providing a voltage of maximum three times the output voltage of the boost converter V_S i.e. 45V, before being regulated to a lower voltage V_{GH} of 27V, suitable for the application. In this case the regulation stage of the negative charge pump regulates the output voltage V_{GL} to –7V, from a –15V generated by the step-up converter.

Ideal Case: Positive Charge Pump

The operation of the charge pump driver can be understood best from **Figure 2**, showing the positive charge pump driver circuit in the typical application, which will generate $2*V_S$ in doubler mode. The following study is done in tripler mode.

The explanations that follow describe charge pump behaviour in steady-state operation, which is simpler to understand. First we will assume that all components are ideal and that the duty cycle of the boost converter is 50%. R1 in Figure 2 is 0 Ohms and is only there to measure the current flowing into the capacitors C1 and C2.

During the on-time, with V_{SW} = 0V, the flying capacitor C1 gets charged to V_S through the diode D1. Similarly, at the same

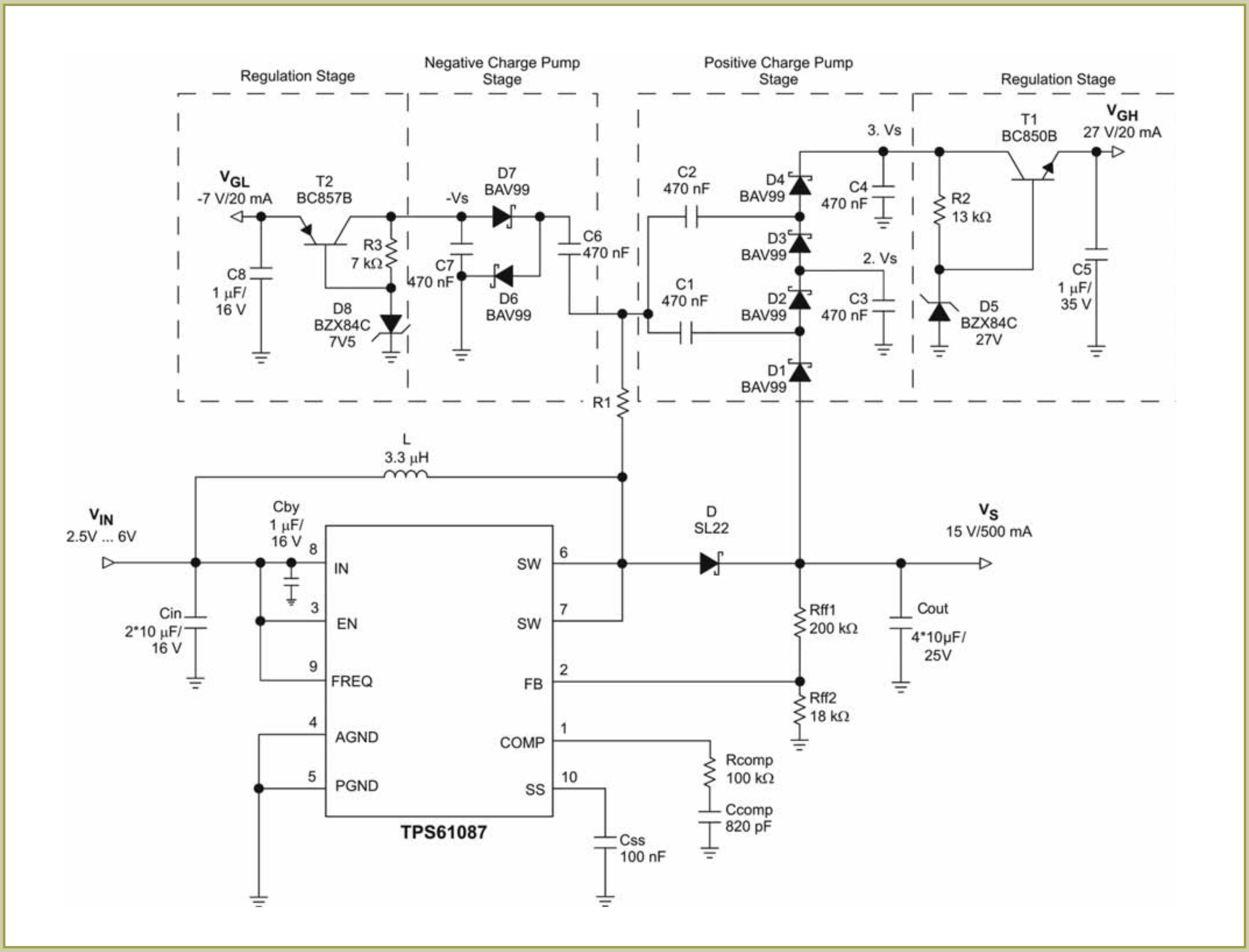

Figure 1: *Typical application 5V to 15V (fsw = 1.2MHz) for TFT LCD with external charge pumps (VGH, VGL)*

time the storage capacitor C3 charges C2 up to 2*V_S via D3. The diodes D2 and D4 are blocked. Since the output VCPP is no longer supplied, the output capacitor C4 has to supply the circuit with the required 20mA load current.

During the off-time, the switch node voltage V_{SW} becomes high and, added to the energy stored in the flying capacitors C1 and C2, lifts C3 and C4 to 2*V_S and 3*V_S respectively (with V_{SW} = V_S). The diode D2 becomes forward biased and lets the current flow into C3, which is charged up to 2*V_S (after the voltage across its terminals decreased during on-time). In the same way, D4 conducts and C3 charges the output capacitor back to 3*V_S, simultaneously supplying the output circuit with the required 20mA load.

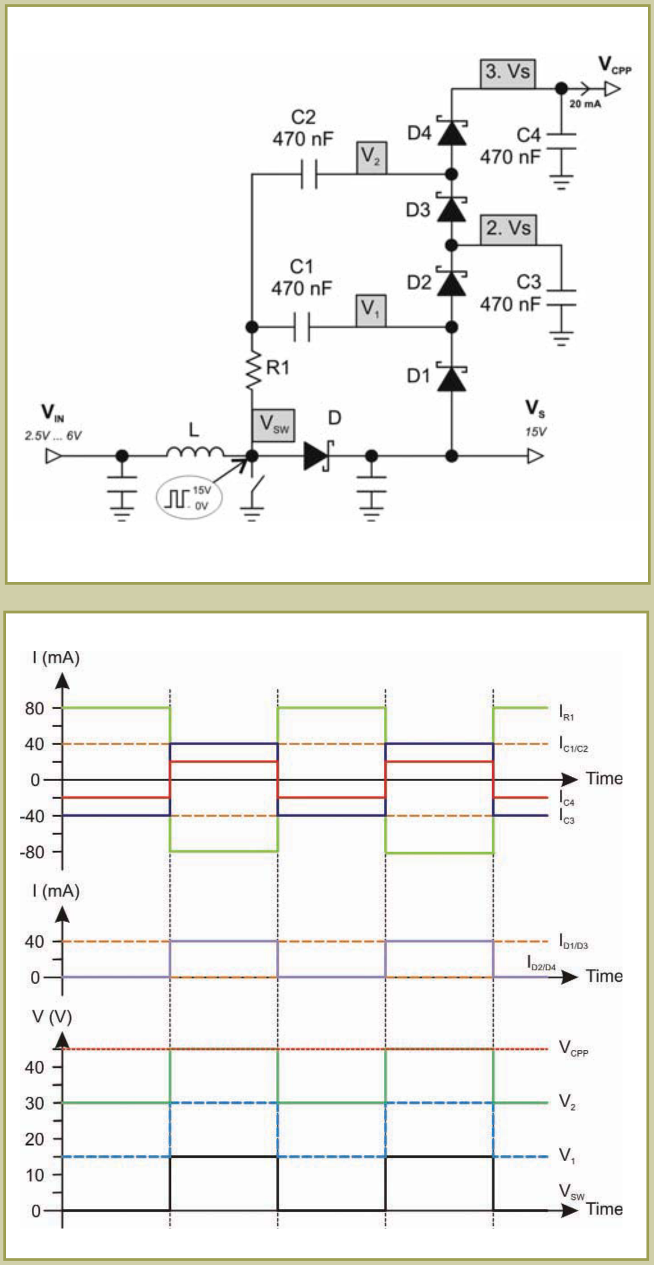

Figure 2: *Positive external charge pump – ideal case*

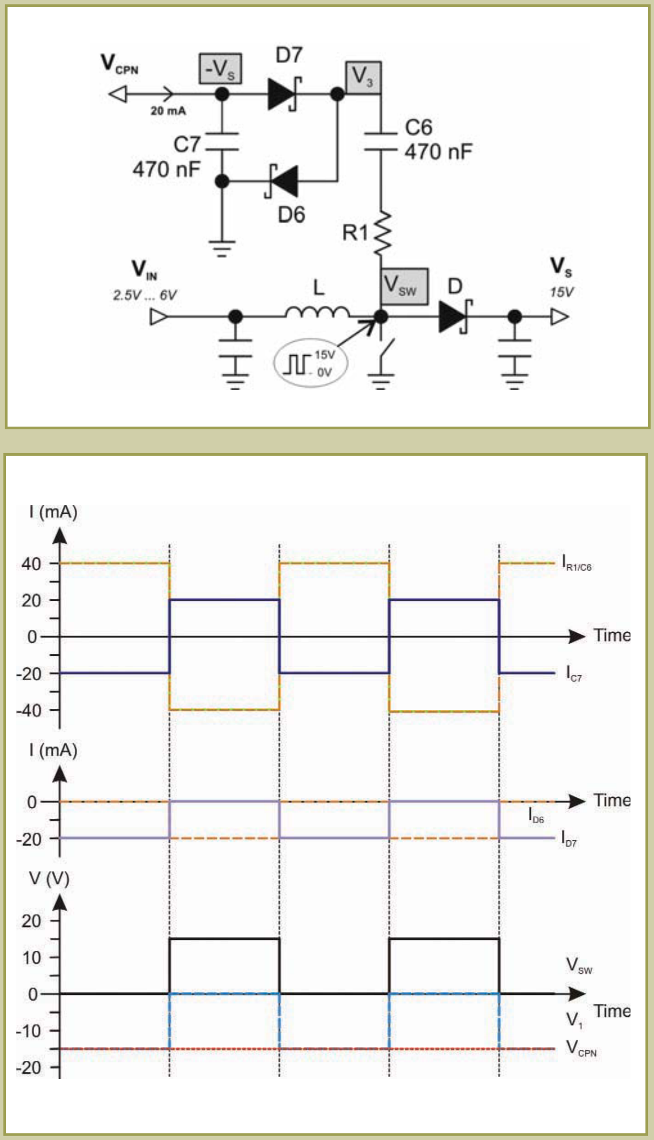

Figure 3: *Negative external charge pump – ideal case*

Finally, during the off-time the inductor supplies 80mA to the flying capacitors as well as 40mA to the output capacitor of the boost converter, which discharged into C1 during on-time. The current provided by the boost converter is thus, on average, equal to three times the output current of the positive charge pump i.e. 60mA.

Negative Charge Pump

The external negative charge pump also works with two stages (charge pump and regulation). The charge pump provides a negative output voltage of –V_S (Figure 1) and the regulation stage adjusts the output voltage V_{GL} to the required level. The operation of the charge pump driver can be understood best from **Figure 3**.

In the following explanation of the negative charge pump behaviour in steady-state operation, it is also assumed that all components are ideal, that the duty cycle of the boost converter is 50% and that R1 is a 0 Ohm resistor.

Starting with the off-time, with the switch node voltage V_S high, the flying capacitor C6 gets charged through D6 up to $V_{SW} = V_S$. During that time, the output capacitor C7 provides the 20mA output load current.

During on-time, since $V_{SW} = 0V$, the previously positive terminal of the flying capacitor C6 is pulled down to ground, and the stored voltage is shifted down with an offset of $-V_S$. The diode D7 is therefore forward biased, allowing current to flow and supplying the output circuit.

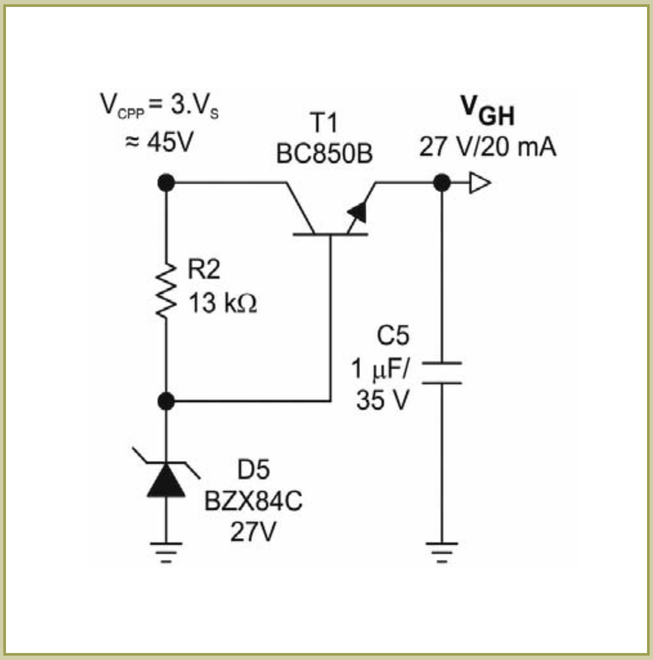

Figure 4: *Positive charge pump regulation stage*

In a similar way to the positive charge pump, the average current provided by the boost converter to supply the 20mA on V_{CPN} in this scenario is equal to twice the output current of the negative charge pump, i.e. 40mA.

Regulation Stage

The regulation stage, with selectable output voltage, gives the user the flexibility to choose an appropriate output voltage for the application.

We have seen how a positive and a negative charge pump build up its voltage. The next stage (**Figure 4**) – similar for positive and negative charge pumps – regulates the output voltage V_{GH} and V_{GL} by dissipating the excess of energy into the bipolar transistor.

The Zener diode clamps the voltage at the desired output value and the bipolar transistor is also used to reduce the current consumption. Finally the output voltage on V_{GH} and V_{GL} will be equal to $V_Z - V_{be}$.

Figures 5a and **5b** show the output voltage regulation measured before and after the regulation stage. It can be seen that the system is well regulated so long as the voltage generated on V_{CPP} and V_{CPN} stays higher than the regulated output voltage, added to the transistor voltage drop. Generating more power is possible with properly rated components, by increasing the charge pumps from tripler to quadrupler mode for example and by selecting the components depending on current and voltage. The maximum output current possible depends also on the sum of the system's entire current consumption, which should not exceed the boost converter current limit.

Instead of using the Figure 4 configuration for the regulation, a shunt regulator type like the TL432 can also be used.

External charge pumps have the advantage of providing the user great flexibility with high performance and low cost. Generating high power charge pumps, positive or negative, can easily be achieved with standalone boost converters like the TPS61085 or TPS61087 from Texas Instruments, and design-in aided with the simulation tool TinaTI.

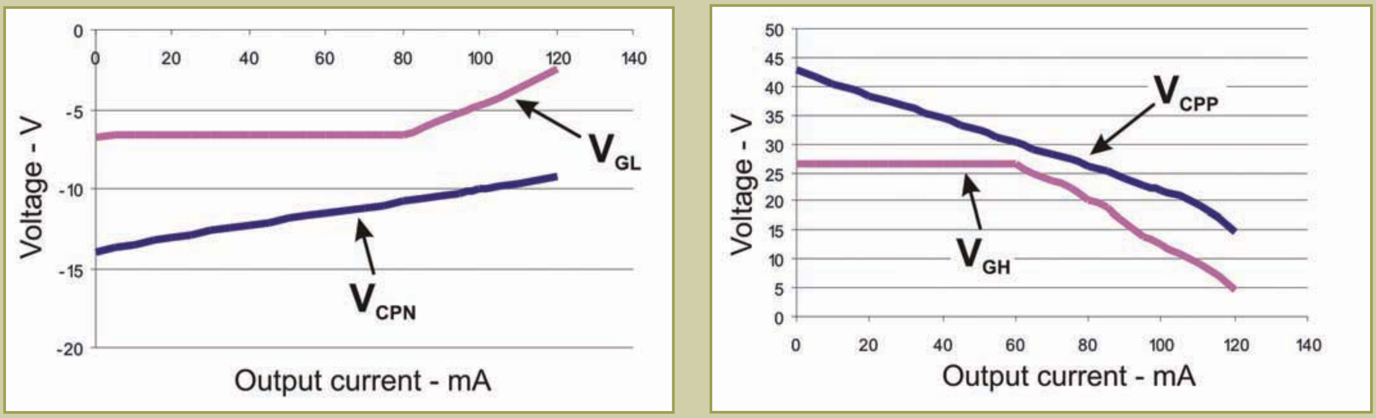

Figure 5: *Regulated output voltage* ***(a):*** *Negative charge pump* ***(b):*** *Positive charge pump*

DC/DC SWITCHMODE UMODULE REGULATOR IN TINY PACKAGE

Available immediately from ACAL Technology is the LTM8021, a complete DC/DC uModule regulator point-of-load (POL) system from Linear Technology with on-board inductor and power components in a package that resembles a surface-mount IC. The LTM8021 operates from input supplies from 3-36V (40V maximum) and delivers up to 500mA.

The LTM8021's tiny footprint (6.25mm x 11.25mm), low profile (2.8mm) and light weight (0.49g) enable system designers to solder the device on the back side of the circuit board, creating room on top for digital ICs such as FPGAs, memory and passives including HDMI, Ethernet or SMA connectors.

The LTM8021 includes a DC/DC controller IC, power switch, inductor, compensation circuitry and input and output bypass capacitors. Its design is as simple as a linear regulator and has the advantage of less heat dissipation and smaller size. Target applications are systems with 5V, 12V, 24V and 28V input supply rails such as medical, industrial, avionics and after-market automotive.

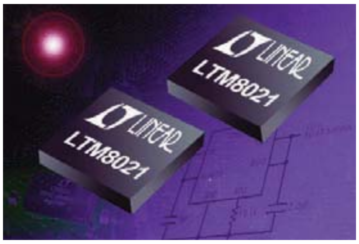

The LTM8021 regulates an output voltage from 0.8-5V that is adjusted with only one resistor. Encapsulated packaging protects the circuit components against mechanical, chemical and ambient factors, thus improving the reliability of the solution. **www.acaltechnology.com**

CURVE TRACER FOR PARAMETRIC TESTING OF HIGH-SPEED DEVICES

A high-speed, high-accuracy, real-time V/I curve tracer that is ideally suited to carrying out DC parametric testing on semiconductor and optoelectronic devices has been introduced by Yokogawa Europe.

The new compact, lightweight unit consists of the Yokogawa GS820 multichannel source measure unit and the 765670 curve tracer software, which runs on a PC connected to the GS820 via a USB link. The GS820's high-speed communication and sweep features allow high-speed real-time updating of the graphical display at a rate up to 20 pages per second.

The instrument is designed for ease of setup and operation, with screens guiding the user through the setup process and the selection of sweep range, graph axes, measurement range and measurement conditions. Curves can be based on various combinations of current and voltage inputs along with time-stamp references. Sweep shape can be set to ramp (linear or logarithmic), triangular (linear or logarithmic) or rectangular, and the number of sweep points can be 5, 10, 20, 0, 100, 200 or 1000.

In addition to facilities for scaling and averaging, the unit offers a number of analysis features including cursor, zoom, scroll and reference curve designation. **www.yokogawa.com**

PICOSCOPE 4000 SERIES WITH DEEP MEMORY

The new PicoScope 4000 Series oscilloscopes with deep memory are available with either 2 or 4 channels and are suitable for general, scientific and field-service use. Their 12-bit resolution (adjustable up to 16 bits in enhanced resolution mode) and 1% accuracy also make them an excellent choice for noise, vibration and mechanical analysis.

A well-matched combination of 20MHz analogue bandwidth and 80MS/s real-time sampling rate allows them to sample high-frequency analogue and digital waveforms. Input ranges from ±50 mV to ±100 V full-scale ensure that the scopes can handle small signals from sensors, as well as higher voltages from power supply circuits and motor drives. The deep 32M-sample memory allows the scopes to capture over 400 milliseconds of data at the maximum sampling rate.

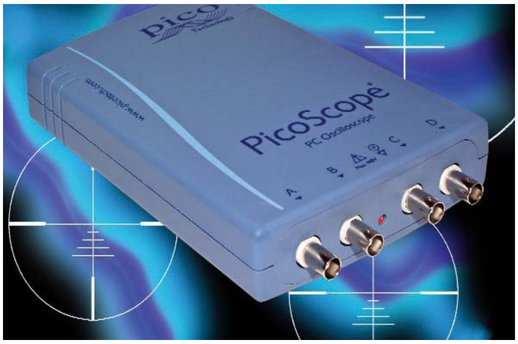

The PicoScope 4000 Series oscilloscopes include the PicoScope 6 software for Windows PCs, which gives you the benefits of your PC's processing power, storage, graphics and networking capabilities. The user interface is easy for novices to learn, but professional users will find many advanced features and options including spectrum analysis, persistence display, automatic measurements, advanced triggers and channel maths. **www.picotech.com**

NP3511-JP AND NP3411-JB KIOSK PRINTERS FROM DED

Designed with flexibility and versatility in mind, the NP3511-JP and NP3411-JB kiosk printers from DED both feature a large universal paper holder making them the ideal solution for almost any kiosk application from ATM's to ticketing and gaming to lottery and information kiosks. Special features on the NP3511-JP include a paper retraction presenter and a 200mm per second print speed, the NP3411-JB offers the advantage of a bezel and print speeds of 150mm per second.

Thanks to the universal paper holder, these printers offer increased flexibility when it comes to integration into kiosks. The universal paper holder can be positioned above or below the printer, or even behind it if necessary; the paper holder is fully rotational through 360 degrees, so can be positioned wherever the size or shape of the kiosk dictates.

Both printers feature easy auto paper-loading thanks to the fully opening head offering easy access and jam free cutter on paper widths of up to 82.5mm. The full paper cut ability has been designed to cope with thicker paper stock, further increasing the printer's versatility for integration into a variety of kiosk applications. **www.ded.co.uk**

NEW CLARE SWITCHSMART IMPROVES MULTIPLE POINT TESTING

A new modular switch scanner that improves the connection of high voltage or high current electrical tests to multiple test points or products has been introduced by Clare Instruments.

SwitchSmart has been designed to interface directly with Clare's high-performance Elite electronic product safety testing system or operate independently within larger system integration/automation applications.

The product can be used for the simultaneous and automated multiple point or multi-product testing of units such as transformers, motors or electrical system devices, which require earth/ground bonding or high voltage HiPot/flash dielectric testing.

Product features 16 switching ports type SPST (NO), making the instrument flexible enough to handle the requirements of safe high voltage or high current electric testing. An easy-to-read, front-mounted LCD display, housed within an impact resistant 4U 19-inch case shows the real-time status of each switch port.

The number of points that can be connected is almost limitless due to SwitchSmart's modular concept (can be daisy-chained), while it can be controlled by either RS-232 serial interface or digital control port.

Maximum switching voltage is 3Kv AC, while the maximum switching current is 32A AC. **www.clareinstruments.com**

NEW SHORTFORM BROCHURE PROVIDES OVERVIEW OF ENCLOSURE PRODUCTS

Electronics packaging specialist Schroff has produced a handy new shortform guide to the company's comprehensive range of products and services.

Providing an ideal starting point for anyone involved in specifying electronics enclosures or related technology, the 32-page A4 Product Overview highlights the main technical specifications and key features and benefits of each product.

The brochure encompasses cabinets, cases, subracks, plug-in units, handles, power supplies and backplanes, as well as an extensive range of complete systems for VME, VME64x, CompactPCI and PXI applications.

In addition, there is a detailed section outlining Schroff's co-ordinated service strategy – ServicePLUS – which has been designed to ensure that customers enjoy comprehensive support from the initial configuration to the final assembly of the product.

Illustrated throughout by means of colour photographs, the new Product Overview can be obtained by visiting Schroff's website and clicking on the 'Catalogue Request' button.

www.schroff.co.uk

HIGH EFFICIENCY 80-150W AC-DC POWER SUPPLY

Powersolve has announced a high-efficiency 80-150W AC-DC supply that features both commercial and medical safety approvals.

The new LPS100-M power supply series from Emerson Network Power comprises compact open-frame designs measuring just 2 x 4 inches with a height of just 1.29 inches. The units have a typical full load efficiency of 88% and a power density in excess of 14watts/in³.

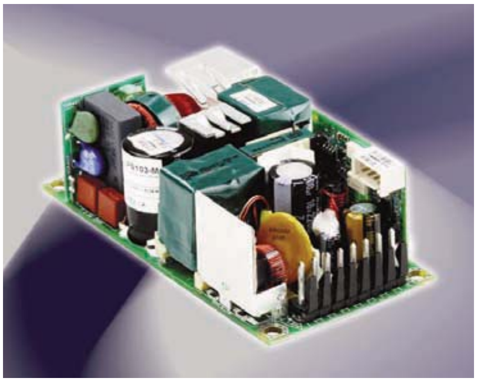

The LPS100-M is primarily intended for use in information technology equipment (ITE) and light industrial systems, as well as for equipment intended for non-patient contact and non-patient critical use in low-power medical, dental and laboratory applications.

The new power supply features a universal 85 to 264VAC input and is also capable of operating from a 120 to 300VDC input. The power supply produces a tightly regulated main 12VDC output, together with an isolated 12VDC fan output rated at 1A, while the main output can deliver up to 8.3A continuously with convection cooling, or up to 12.5A continuously with 30 CFM forced air cooling. The main output can be adjusted over the range 10.8 to 13.2VDC. Remote sense facilities are provided to compensate for a drop of up to 0.5V between the output terminals and the load. **www.powersolve.co.uk**

DIGI-KEY STOCKS CIRRUS LOGIC'S NEW PWM ICS FOR MID-RANGE BRUSHLESS AND BRUSH DC MOTORS

Digi-Key Corporation announced today that it is stocking the recently introduced Cirrus Logic Apex Precision Power SA306-IHZ and SA57-IHZ, the industry's highest current pulse width modulated (PWM) ICs targeted at the fractional horsepower DC motor drive market.

With these new ICs, designer engineers, for the first time can choose a single-packaged solution for driving three-phase brushless DC motors or brush DC motors in the 9 to 60V supply range. These ICs can deliver up to 17A peak output current and target motor control circuits used in industrial applications such as factory and office automation, robotic controls, product handlers, as well as aircraft seating and positioning controls in the aerospace and military markets.

Available now through Digi-Key's online catalogue, these ICs will also be featured in future print catalogues. Additionally, the SA306-IHZ Demo Board DB64 and SA57-IHZ Demo Board DB63 are stocked and available for purchase. Product highlights and specifications as well as Digi-Key's exclusive PTM Online...On Demand product training modules are available for these new products online from DigiKey's website.

www.digikey.com

NEW UK WEBSITE PROVIDES LOCAL CONTENT FOR CONNECTOR BUYERS

Worldwide distributor of military connectors, industrial connectors, commercial connectors and more with the fastest assembly time in the world: just 48 hours.

International assembling distributor PEI-Genesis has launched a new UK website, www.peigenesis.co.uk, to provide easy access to a range of useful information for customers and potential customers in the UK.

The UK homepage includes an introduction to the company, its unrivalled 48-hour connector assembly service and details of key suppliers such as Amphenol and ITT Interconnect Solutions.

In addition, dedicated pages cover the new European headquarters and state-of-the-art connector assembly facility at Southampton, UK news and UK-specific products. There is also a handy page showing the contact details of all PEI-Genesis internal sales staff and regional sales managers, complete with a table of postcodes to enable customers to reach the right person as quickly as possible.

Numerous links take visitors directly to the PEI-Genesis global website for popular features such as the inventory search facility, connector comparison chart and the comprehensive library of PDF datasheets.

www.peigenesis.co.uk

HEAVY DUTY CONNECTORS DESIGNED FOR POWER-TO-ELECTRONICS APPLICATIONS

Amphenol Industrial Operations's heavy duty Amphe-GTR series connectors are ideal for high-power process control, computer server and power to electronics applications in harsh environments including wind power production, mass transit and other industrial applications. These high-integrity connectors utilize the high amperage and low insertion force of Amphenol's patented RADSOK contact technology and can be installed in the field without special tools, to reduce operational down-time.

Amphenol's Amphe-GTR connectors feature a reverse bayonet coupling that provides quick mating and disconnection using a quarter-turn coupling device. They incorporate a high-performance molded composite plug shell, coupling nut, receptacle and hardware. Available formats include three, four or five pin variations, a compression (setscrew) wire termination for either 6-10mm^2 or 16-25mm^2 wire gauge and silver-plated contacts. The connector series is widely adaptable and hassle-free with its easily replaceable pin and socket contacts or complete plug or receptacle assemblies. The device allows for higher currents at higher temperatures, ranging from -55°C to more than 125°C. Applications in the harsh environments for which the Amphe-GTR is designed can take advantage of these attributes without overworking the product.

www.amphenol-industrial.com

COMPLETE PROTECTION WITH WIELAND'S SMA SENSORS

Wieland Electric has launched the SMA Series of sensors to provide an efficient and effective way of protecting operators of mechanical equipment and systems, as outlined in the new Machine Directive Safety Standards. The new Directive dictates that strict safety procedures have to be carried out in line with mechanical safety, fire, temperature, explosion, construction and electrical safety.

The SMA Series sensors, used for contactless monitoring of protective doors and safe positions, are equipped with integrated manipulation protection and can withstand a high degree of vibration. The design of the sensors also offers greater tolerances in door guidance than similar products on the market.

The SMA Series is available in a choice of round, square or rectangular packages with M8 screw or cable connection for quick and easy termination, whilst washers to isolate the sensors from the device it is mounted on are another option.

Suitable for use up to and including Category 4 (EN954-1) and high switching interval applications, the SMA series has a rating of IP67 and is ideal for use in areas where strict hygiene is required, such as the food and pharmaceutical industries. The robust construction of the SMA Series enables the product to be used in areas of high soiling.

www.wieland.co.uk

FUSIBLE RESISTORS SAVE LINE-INPUT COMPONENT COUNT

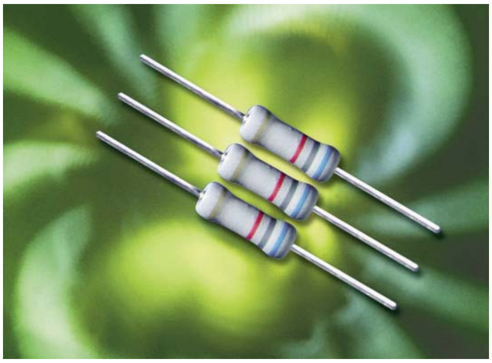

To save component count in mains-input protection circuits, Welwyn Components has developed the EMC2 fusible resistor combining the pulse performance of a wirewound resistor with the quick fusing properties of metal-film technology.

Using a single EMC2, designers can replace the separate 240V fuse and input resistor traditionally used with a varistor or TVS to protect against line-voltage transients and limit inrush current, and ensure isolation in the event of potentially damaging faults. EMC2 resistors are UL1412 recognised and are flameproof according to UL94-V0.

The EMC2 series is available in standard E12 resistance values from 4.7 Ohms to 68 Ohms, with 100ppm/°C temperature coefficient and in 10% and 20% tolerance versions. The devices achieve a high power rating of 2W within a compact, axial-leaded construction of length 10mm and body diameter 4mm.

The EMC2 series is aimed primarily at power supplies and battery chargers, and will operate in a wide variety of environments from –55°C to 155°C.

www.ttelectronics.com

NEW PI EXPERT SUITE V7.1 FROM POWER INTEGRATIONS

Power Integrations introduced a new version of its popular power supply design software, PI Expert. The software now supports the LinkSwitch-CV and LinkSwitch-II families of primary-side-control switcher ICs and includes comprehensive design functionality for offline LED drivers.

PI Expert Suite v7.1 consists of three components:

* PI Expert: An interactive program that takes a designer's power supply specifications and automatically generates the electrical design and selects the critical components required to build a cost-effective switched-mode power supply. The tool also provides a detailed electrical and mechanical transformer design using PI's proprietary eShield EMI reduction techniques. Optimization choices stressing cost and efficiency are included to help designers target specific needs. The program reduces design time from days to minutes.

* PI Xls Designer: A hands-on approach to power supply design for advanced users and those who prefer a spreadsheet interface, along with support for recently introduced products not yet included in PI Expert. The tool generates detailed engineering and mechanical designs to assist users in prototyping the transformer.

* PI Viewer: A tool for viewing design files created with older versions of PI Expert.

PI Expert Suite v7.1 is available now for free download, with fully supported English and simplified Chinese versions, at www.powerint.com/pi-expert. Transformer prototypes generated by the software may be ordered through PI's Rapid Transformer Sample Service (RTSS); a quick-start guide describing how to create a compatible design file is available at www.powerint.com/rtss. **www.powerint.com**

COST-EFFECTIVE AND EASY-TO-ASSEMBLE METAL BACKSHELLS

A new metal backshell series for D-Subminiature connectors from ITT Interconnect Solutions offers protection from electromagnetic and radio interferences to cable assemblies. D*FM series metal backshells are very easy to assemble and fit, and have been designed for use in industrial and telecom applications.

Featuring a blue chromated zinc housing and a unique metal-filled plastic cable strain-relief guaranteeing 360° shielding, D*FM series metal backshells are competitively priced and don't require any crimp ferrule tooling.

Size 9, size 15 and size 50 components will be available from January 2009. Size 25 and 37 devices will be added to the range in March 2009. Fully RoHS compliant, the backshells can be used over a wide operating temperature range from -40 up to +120 degrees Celsius. **www.ittcannon.com**

EPLAX PK PLUG-IN POWER SUPPLIES AVAILABLE FROM SURTECH

Surtech Distribution, the enclosures and accessories specialist distributor, has announced immediate availability on PK series plug-in power supplies for 3U and 6U Eurocard-based sub-racks from Eplax of Germany. The popular PK PSUs, originally marketed in the UK under the VEROPOWER brand, are available in single, dual and treble output versions in a range of different sizes, all available ex-stock or on very short lead-times.

PK power supplies have a compact, rugged design in a stable aluminium cassette for use with subracks to DIN41494 and feature VERO standardized pinning. They offer high regulation accuracy, with stable, adjustable outputs and overvoltage protection.

The Monovolt single output power supplies are available in five different versions, with outputs ranging from 30 to 240W. Dual-output Bivolt models start with the PK30 model, rated at 30W, with four further 60W models in different sizes to suit most applications. Completing the PK series are the three Trivolt models: the Trivolt PK60 A/B and TrivoltPK60-A/B PF, both with 60W output. The latest model, the Trivolt PK75, has outputs of 5V and plus or minus 12V.

All PK power supplies are certified to EN60950, UL and cUL safety standards and have a 24-month product warranty. **www.surtechdist.co.uk**

Colour screen shot and text is just £350 + vat for 12 months

Beta Layout Ltd

www.pcb-pool.com
The Best Value Online PCB Prototyping Service Available:
Instant on line quotations & ordering (no pre registration).
We offer the following:
• No minimum quantity. • No tooling charges. • No drill Limitations. • 1 to 6 layers (prototype quantities) • 2 layers (small production batches) • Fr4,1.6mm,35 um,HASL (Pb free/Rohs/Weee) • Soldermask / Silkscreen (optional) • Leadtimes from 2 -8 working days • Full DRC on all orders (we manually check every file !!!). • PCB-POOL® accepts direct outputs from 15 major layout softwares (see our website for details)
Download our fully functional PCB LAYOUT software FREE of charge.
Free Phone : 0800 3898560

Sky systems ltd

www.sky-pcb.com
Sky Systems Ltd. was established with the vision and promise of providing manufacturing high quality, cost effective solution and one-stop service to meet the most demanding of our customers' requirements.
We offer the followings:
• 1-12 Layers • Fr-4 / Cem-3 • HAL(Lead Free),Flash Gold, Electroless Gold Plating, OSP ,Immersion Silver, Immersion Tin • Gold Finger • Soldermask • Silkscreen • Routing / Punching / V-Cut • Online quotation • FREE PCB Prototype with quantity orders • Short lead time • Fast worldwide delivery • Flexible quantity • CHINA Factory
For more information or request a quote today from our web site.

Designer Systems

http://www.designersystems.co.uk
Professional product development services.

• Marine (Security, Tracking, Monitoring & control)
• Automotive (AV, Tracking, Gadget, Monitoring & control)
• Industrial (Safety systems, Monitoring over Ethernet)
• Telecoms (PSTN handsets, GSM/GPRS)
• AudioVisual ((HD)DVD accessories & controllers)
Tel: +44 (0)1872 223306

Microchip Technologies

http://www.microchip.com/
Microchip Technology Inc. is a leading provider of microcontroller and analogue semiconductors, providing low-risk product development, lower total system cost and faster time to market for thousands of diverse customer applications worldwide. Microchip designs, manufactures, and markets a variety of high performance components for high volume, cost-effective embedded control solutions, including 8- and 16-bit PIC® microcontrollers; dsPIC® digital signal controllers; development kits; serial EEPROMs, more than 350 mixed-signal analogue and interface products; KEELOQ secure data transmission products; and the PowerSmart® family of smart battery management products. Microchip's product solutions feature compact size, integrated functionality, and ease of development.

Increased Focus on Power Supplies and DC/DC Converters

Arrow Electronics has expanded its power technology portfolio by signing a distribution agreement with Recom, a leading global supplier of DC/DC and AC/DC converters. Arrow will sell and support Recom's complete power converter product range throughout Europe.

The new agreement is in line with Arrow's strategy to provide the widest possible range of power supply and converter technologies to designers across Europe. For Recom, the agreement will expand the penetration of its product ranges into European markets and ensure that customers have access to products and support at a local level.

Available in single, dual, and triple rail outputs and a wide variety of input and output voltage configurations, power ratings, and isolation voltages, Recom converters are used in most industries requiring low- to medium-power voltage conversion in the 0.25W to 60W range. The company also offers the largest range of safety agency-approved converters from any manufacturer.

www.arrowne.com

Harwin in an Exclusive European Trio-Tek Catalogue Sales Agreement with Farnell

High-reliability interconnect company Harwin has appointed Farnell as exclusive European catalogue distributor for its innovative Datamate Trio-Tek range of crimp contact connectors.

Harwin's Datamate Trio-Tek open-barrel crimp contact offers significant advantages over conventional Datamate contacts whilst providing the same high reliability, as it enables assembly time to be shortened significantly and therefore reduces processing costs. The new crimp design features a triangular form that simplifies the insertion of contacts into the housing, enabling customers to fully automate crimping in medium and high volume applications.

Harwin's Datamate Product Manager Graham Cunningham commented: "Farnell is one of Europe's leading distributors and justifiably known for offering customers an extensive range of the best products and latest technology from leading manufacturers. We have a strong relationship with them and believe their reputation for first-class customer service and the strength of their catalogue media will provide an excellent partner for Trio-Tek. We are delighted to have appointed them as our catalogue distributors for this important initial phase of Trio-Tek sales in Europe."

Farnell's Justin Willoughby said: "We have a long and fruitful relationship with Harwin and always welcome the opportunity to offer their latest products to our customers. Harwin's expertise as a global leader in the design and manufacture of electronic interconnect solutions means their products are always leading edge and provide elegant solutions for electronics engineers across a great number of applications and markets."

www.farnell.co.uk
www.harwin.co.uk

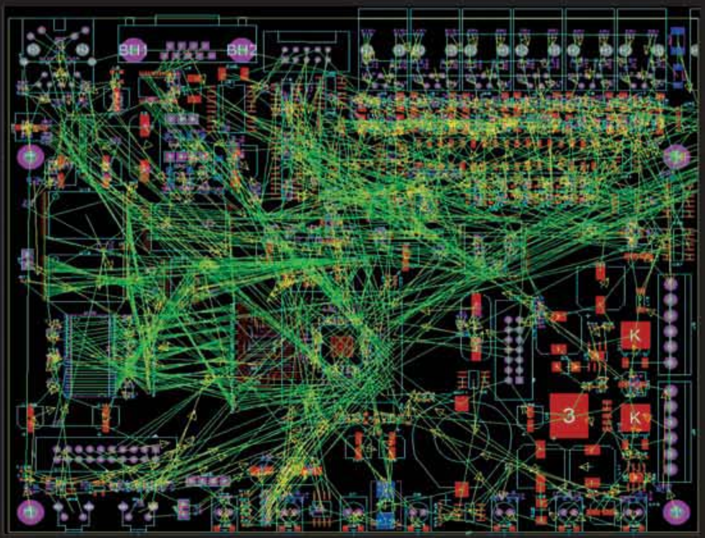
BH1
BH2
K
3
K

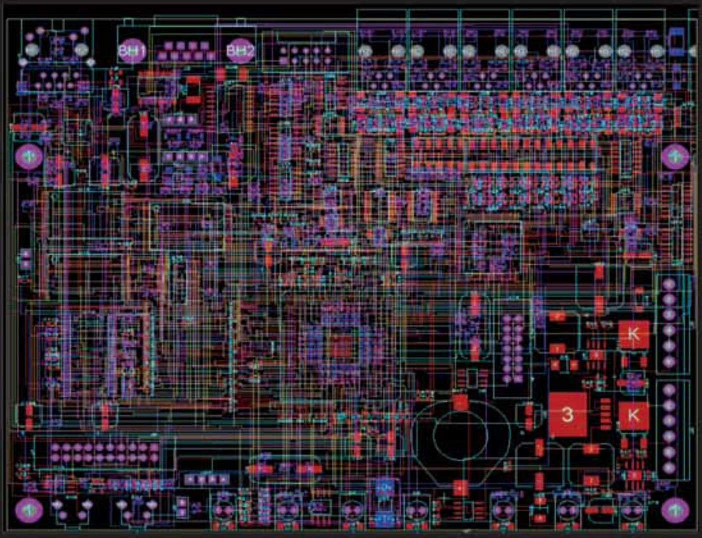
BH1
BH2
K
3
K